2014

Design Manual

Ronald Reagan Washington National Airport
Washington Dulles International Airport

The Design Manual documents are official and formal publications of the Metropolitan Washington Airports Authority. The primary Design Manual documents are viewed by Acrobat *.pdf files on the CD-ROM.

All supplemental documents provided in support to the Design Manual are also official releases of the Metropolitan Washington Airports Authority, Office of Engineering. These include the Specifications, To-Reach Documents and Exhibits.

The “To-Reach” manuals are survey control data sheets for the monumentation update programs at both Ronald Reagan Washington National Airport and Washington Dulles International Airport. A bookmark link has been provided for only Ronald Reagan Washington National Airport’s To-Reach document (Home/View Files on CD/To-Reach DCA).

METROPOLITAN WASHINGTON AIRPORTS AUTHORITY

2014

Design Manual

Ronald Reagan Washington National Airport
Washington Dulles International Airport

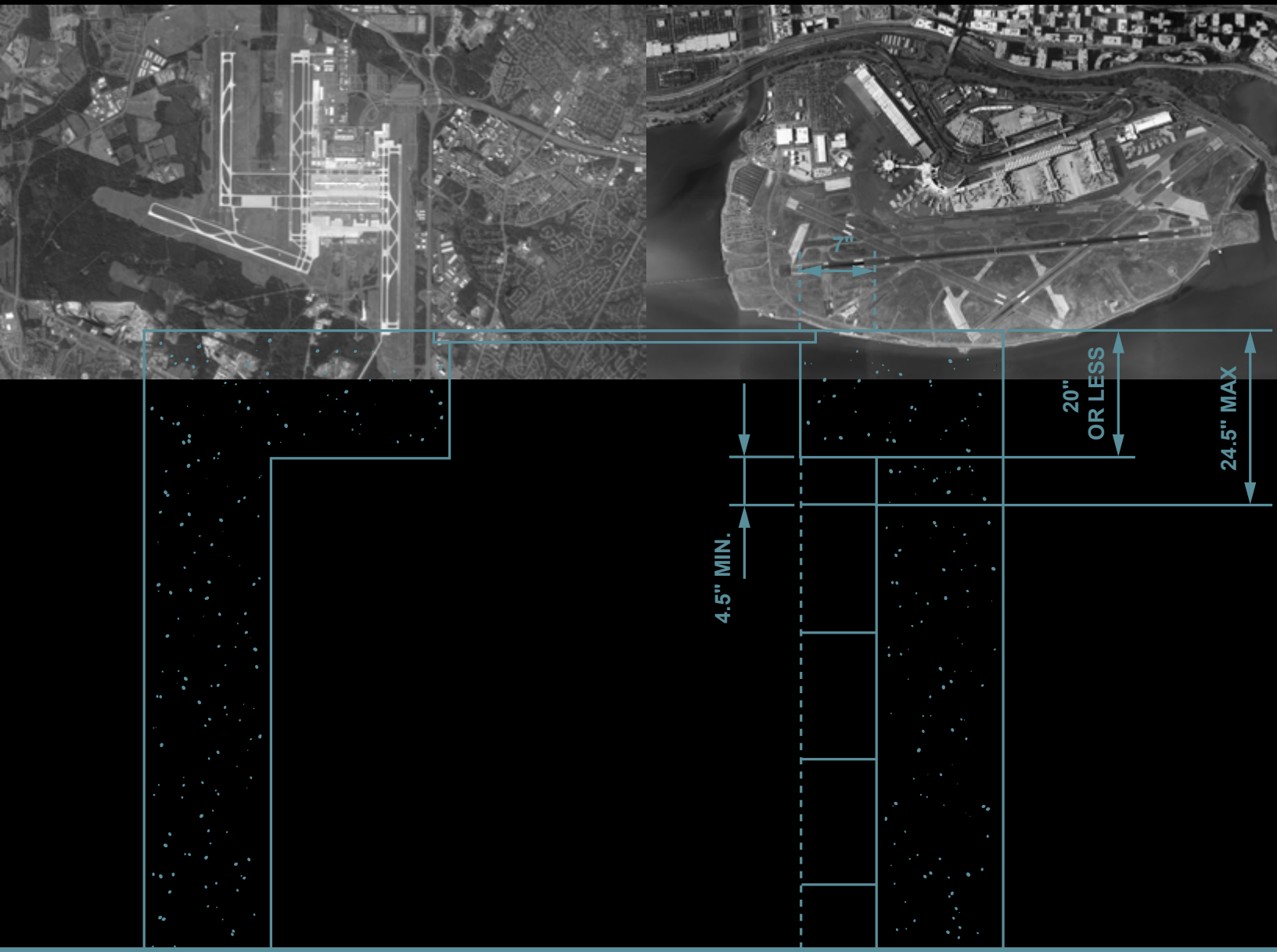

METROPOLITAN WASHINGTON AIRPORTS AUTHORITY

PREFACE

THE *DESIGN MANUAL*

As part of the ongoing design and construction programs at Ronald Reagan Washington National Airport and Washington Dulles International Airport, the Metropolitan Washington Airports Authority (the Authority), Office of Engineering, has developed and adopted a series of documents that describe the codes, standards, details, products, and practices to be followed by Architect/Engineers (A/Es). These documents apply to all design of construction at all facilities on property owned by the Authority. Facilities constructed or modified on the site occupied by the National Air and Space Museum located at Washington Dulles International Airport are exempt from the requirements of the Authority *Design Manual*.

The *Design Manual* has been developed to assist Architects/Engineers (A/Es) in understanding the practices and policies that must be incorporated into each project. The *Design Manual* contains a number of specific requirements that must be followed on all projects, as described above. These can be either Authority contracted projects, Authority direct-constructed projects, and tenant contracted projects.

APPLICABILITY OF THE *DESIGN MANUAL*

The requirements for design and construction incorporated into the *Design Manual* and Supporting Volumes are regulations approved by the Metropolitan Washington Airports Authority Board of Directors and shall be considered contract requirements for all A/Es who are performing services under contract to the Authority. Although A/Es who are under contract to tenants of the Authority may not be working under contract provisions that make compliance with these requirements mandatory, the Authority reserves the right, as Owner of all airport facilities, and land on which tenant buildings are constructed, to reject any design or work that does not comply with the requirements of the *Design Manual* and its supporting volumes. It is, therefore, required that all A/Es performing work that will be constructed on airport property shall perform services consistent with the Authority policies, standards, procedures, and construction requirements contained in the *Design Manual* and its supporting volumes. The *Design Manual* should be considered equivalent to the building codes. The *Design Manual* in effect at the 30% Submittal will remain the *Design Manual* of record up to the 100% Final Submittal.

ORGANIZATION OF THE *DESIGN MANUAL*

The *Design Manual* is made up of seven volumes.

Basic policies, procedures and standards for both Airports:

- *Design Manual* [THIS DOCUMENT]

Requirements for Ronald Reagan Washington National Airport:

- DCA Vol. 1 - Airport Standards and Signing Guidelines
- DCA Vol. 2 - Tenant Design Standards

Requirements for Washington Dulles International Airport:

- IAD Vol. 1 - Airport Design Standards and Signing Guidelines
- IAD Vol. 2 - Main Terminal/Concourse Z Tenant Design Standards
- IAD Vol. 3 - Concourse B Tenant Design Standards

Requirements for All Projects:

- CADD - CADD Design Standards

The seven volumes are intended to supplement each other and must be used together, as appropriate for each airport, to achieve the desired goals of the Authority.

An electronic version of the *Design Manual* and Supporting Volumes is available on CD-ROM, which may be obtained by contacting the Authority Office of Engineering. It is also available on the Authority website at www.mwaa.com under "Publications".

OTHER DOCUMENTS

In addition to the *Design Manual*, the Authority also requires compliance for design and construction with additional policies, procedures, and standards that are published by other departments. These documents include:

- Construction Safety Manual
- AVIATION Owner Controlled Insurance Program Manual
- Building Codes Manual
- Contractors Safety and Security Information (Washington Dulles International Airport)
- Safety Policy, Procedures, and Practices by the Risk Management Department
- MASTERSPEC© Specifications Sections specifically edited for Authority projects (primarily Division 01, but including specific technical specification sections)
- Ronald Reagan Washington National Airport and Washington Dulles International Airport Survey Control Data "To-Reach" Descriptions (two separate volumes) Note that the "To-Reach" documents for Washington Dulles International Airport are no longer provided on the CD-ROM version of the *Design Manual*. These documents are available through the Authority. The CD-ROM contains information directing the A/Es to the proper group within the Authority to obtain this document.
- Virginia Statewide Fire Prevention Code

ACCEPTABLE STANDARDS

The standards established by the above referenced documents, together with Federal Aviation Administration (FAA), National Fire Protection Agency (NFPA), Virginia Uniform Statewide Building Code (USBC), Construction Specifications Institute (CSI), and other referenced materials establish the minimum level of quality and detail required of all Authority projects. These standards in many instances may exceed those used in non-Authority design and construction projects and are often above those established as “Code Minimums”, “Standards of the Industry”, or “generally accepted practices.”

DESIGN MANUAL REVISIONS

This edition of the *Design Manual* incorporates the modifications and additions that were developed during the Authority annual review of the previous year’s *Design Manual*. This review includes an analysis of the existing standards and an evaluation of the suggested revisions.

If you feel that a standard or procedure stipulated in this edition of the *Design Manual* should be revised, we would like to know. To facilitate this, we have included a *Design Manual* Revision Form that will place your idea in the appropriate hands. All suggestions received will be reviewed and researched and a written response will be provided.

DESIGN MANUAL REVISION FORM

SUGGESTED REVISION TO THE *DESIGN MANUAL*

Date: Log Number: 14-

To: Ms. Diane R. Hirsch, PE
Manager of Design
Metropolitan Washington Airports Authority
Ronald Reagan Washington National Airport
Washington, DC 20001

From:

Design Manual Volume & Section:

Design Manual Paragraph:

Design Manual Page:

Background:

[Insert background for suggested change(s) here.]

2014 Design Manual Text:

[Copy and paste here the text from the 2014 *Design Manual* for which a revision will be suggested.]

Proposed 2015 Design Manual Text:

[Use RED text, normal font not bold, to indicated added language. Use “strikeout” to indicate deleted language. Do not use “track changes”.]

TABLE OF CONTENTS

(This Page Blank)

INTRODUCTION

GUIDE TO THIS VOLUME OF THE *DESIGN MANUAL*

This Section is a compilation of design criteria for numerous materials, components, and assemblies that must be incorporated into the design of all facilities for the Authority. The A/E shall review this section in preparing the design drawings and customized Contract Specifications and shall incorporate all relevant requirements into the documents. These requirements apply to both Ronald Reagan Washington National Airport and Washington Dulles International Airport, unless specifically stated as a particular requirement of only one facility. Other standards are included as supporting volumes to this Manual. They include:

Ronald Reagan Washington National Airport

- DCA Vol. 1 – Airport Design Standards and Signing Guidelines
- DCA Vol. 2 – Tenant Design Standards

Washington Dulles International Airport

- IAD Vol. 1 – Airport Design Standards and Signing Guidelines
- IAD Vol. 2 – Main Terminal/Concourse Z Tenant Design Standards Guidelines
- IAD Vol. 3 - Concourse B Tenant Design Standards

All Projects

- CADD – CADD Design Standards

This volume consists of the core policies, procedures, standards, design criteria, and products for both Ronald Reagan Washington National Airport and Washington Dulles International Airport.

This volume consists of three sections:

Section I

The Metropolitan Washington Airports Authority

Describes the overall operation and policies of the Authority

Chapter 1:	General
Chapter 2:	Design and Construction Policies
Chapter 3:	Interface with Other Organizations

Section II

Design Procedures

Describes the general design procedures required by the Authority

Chapter 1:	Architect/Engineer Contract Management
Chapter 2:	The Design Phase
Chapter 3:	The Procurement Phase
Chapter 4:	Construction Permits
Chapter 5:	Contracting and General Requirements
Chapter 6:	The Post-Occupancy Phase
Chapter 7:	Standard Format for Reports and Specifications

Section III

Design Criteria

Describes specific criteria for design purposes

Chapter 1:	Introduction
Chapter 2:	Contracting and General Requirements
Chapter 3:	Environmental Requirements
Chapter 4:	Site Work and Exterior Utilities
Chapter 5:	Civil
Chapter 6:	Landscaping
Chapter 7:	Buildings
Chapter 8:	Structural Systems
Chapter 9:	Mechanical General Standards
Chapter 10:	Piping Systems
Chapter 11:	Heating, Ventilating, and Air Conditioning
Chapter 12:	Plumbing
Chapter 13:	Thermal Insulation for Mechanical and Plumbing Systems
Chapter 14:	Utility Meters
Chapter 15:	Fire Suppression Systems
Chapter 16:	Fire Alarm Systems

SECTION I: The Metropolitan Washington Airports Authority

CHAPTER 1 General

The Metropolitan Washington Airports Authority is a public body politic and corporate, created with the consent of the Congress of the United States by the District of Columbia Regional Airports Authority Act of 1985, as amended, and Ch. 598, Virginia Acts of Assembly of 1985, as amended. The purpose of this entity is to plan, provide, and actively manage world-class access to the global aviation system in a way that anticipates and serves the needs of the National Capital area. Effective June 7, 1987, the Authority assumed responsibility for Ronald Reagan Washington National Airport and Washington Dulles International Airport. The Authority operates, maintains, and improves both Ronald Reagan Washington National Airport and Washington Dulles International Airport as primary airports serving the metropolitan Washington area, and it is independent of the Commonwealth of Virginia, the District of Columbia, and the Federal Government in the performance and exercise of airport-related duties. The Federal Government opened Ronald Reagan Washington National Airport in 1941. It is located on 860 acres, (733 on land; 127 reclaimed from the Potomac River in Arlington, Virginia), approximately three miles from downtown Washington, D.C. In addition to airside and support facilities, Ronald Reagan Washington National Airport includes a passenger terminal complex, aircraft hangars, office and retail spaces, and Metrorail. Metrorail is the public rail transit system serving the Washington, D.C. metropolitan area. The Federal Government opened Washington Dulles International Airport in 1962. The Airport is located on approximately 11,500 acres of land in Fairfax and Loudoun counties, Virginia. The Airport is approximately 26 miles west of Washington, D.C. The facilities at Washington Dulles International Airport include airside and support facilities, the Main Terminal, midfield concourses, midfield aircraft parking-aprons, and air cargo buildings.

1.1 Purpose of the Authority *Design Manual*

1.1.1 General: The purpose of the Design Manual is to establish procedures and set standards for each airport in order to achieve consistency in all design and construction projects related to the Authority and Authority Tenants. The Authority will provide a copy of the Design Manual and Supporting Volumes to all Architect/Engineer (A/E) firms performing designs for the Authority and Authority Tenants. The requirements of this Manual apply to all design projects at both airports.

1.1.2 Document Precedence: Many of the requirements of this Manual are more stringent than those defined by the building codes of adjacent jurisdictions but the Design Manual requirements are mandated regulations of the Authority and shall be complied with by the A/E. Should the requirements of the codes, standards or other documents referenced in this Manual be more stringent than the Manual requirements, the A/E shall notify and seek guidance from the Authority before applying any such requirements.

(This Page Blank)

CHAPTER 2 Design and Construction Policies

2.1 Compatibility with Aviation Operations

2.1.1 General: The Authority is responsible for the safety and efficiency of air operations at both airports. In this respect, the operation and development of each airport shall be in compliance with applicable Federal regulations and be consistent with accepted airport standards. Structures and facilities shall not pose a hazard to aircraft operations, interfere with established Federal Aviation Administration ground or air control procedures, nor impede the safe flow of aircraft traffic.

2.2 Architectural Compatibility

2.2.1 General: The Authority requires that the design of facilities at each airport be compatible with the existing architectural design characteristics. Major aesthetic issues, such as views and sight lines of buildings, must be considered. The scale and proportions of existing elements must be honored. Structures and facilities must be designed within the context of their entire surrounding area and the planned future development of the area. Design Manual supporting volumes provide design guidelines for major facilities at both airports. A/Es should review the possible impacts of proposed new facilities on existing conditions, services, and systems as well, and work to mitigate conflicts and provide appropriate interface with the surrounding facilities.

2.3 Environmental Protection

2.3.1 General: The Authority complies with all federal and state environmental laws and regulations. All construction design and environmental engineering design efforts must conform to federal and state environmental laws and regulations as well as Authority environmental management policies. A/Es are required to inquire concerning specific environmental policies that apply to design activities at each airport. Refer to **Section III, Chapter 3** for additional requirements.

2.4 Historic Preservation

2.4.1 General: With the transfer of Ronald Reagan Washington National Airport and Washington Dulles International Airport from the Federal Aviation Administration to the Authority, the Authority became responsible for the identification, evaluation, and protection of the historic and archaeological resources contained on the property. This responsibility is framed in a 1978 Programmatic Memorandum of Agreement (PMOA) between the Federal Aviation Administration (FAA), the Virginia State Historic Preservation Officer (VASHPO), and the Federal Advisory Council on Historic Preservation (ACHP). Subsequently, an official determination was made that Ronald Reagan Washington National Airport contained a complex of historically significant buildings, structures, and site features that were listed in the National Register of Historic Places. This complex includes the Main Terminal (Terminal A) and South Hangar Line, as well as the traffic circle in front of the Main Terminal. The National Register designation places primary focus on the 1941 portion of the Main Terminal, with the 1948-50 South Extension and the 1956 baggage room also considered contributing elements to the building's significance. The 1978 Programmatic Memorandum of Agreement, as well as other subsequent consultation and agreements lay out guidelines and procedures that must be followed whenever a project has the potential to effect historic/archaeological resources on the airport property. Projects that will require the demolition, removal, alteration or rehabilitation of historic structures or have the potential to disturb subsurface archaeological remains must be coordinated with the VASHPO and the ACHP. Projects that will have a direct impact upon these significant structures will require formal historic preservation consultation and the execution of a supplementary Memorandum of Agreement. Construction activities, including both renovation and new projects affecting the historic character of the airport property must be completed according to the provisions of the Secretary of the Interior Standard for the Treatment of Historic Properties. While design A/Es are not normally responsible for the management or funding for archaeological or historic preservation work necessitated by their projects, they are

required to coordinate these efforts with the Authority Design Department and Authority consultants.

2.5 Master Plans

2.5.1 General: There is an Authority adopted Master Plan for each airport that provides guidance for the systematic development of physical facilities at each airport to accommodate current and forecasted activity demands. An important element of each Master Plan is the approved Airport Layout Plan (ALP). The ALP graphically shows concept development in accordance with recommendations of the Master Plan. Another significant element of each Master Plan is the Airport Land Use Plan (ALUP), which is also a component of the ALP. The ALUP identifies recommended use of airport property that will satisfy long-range facility development. Development at each airport shall be consistent with the recommendations of its Master Plan.

2.6 Sub-Area Plans

2.6.1 General: The Authority, in addition to Master Plans, has prepared and approved Sub-Area Plans for development of certain areas at each airport. These plans show further detail of areas delineated in concept on the ALP, such as that identified for cargo, airport and airline support, rental car, etc. The plans provide site-specific development parameters, such as development envelopes; facility set back lines, utility corridors, etc. Development of projects shall be consistent with these Sub-Area Plans.

2.7 Risk Management and Wrap-Up Insurance

2.7.1 General: The Authority has arranged for selected airport and toll road construction projects to be insured under an Owner Controlled Insurance Program (AVIATION OCIP). Tenant projects are excluded from participating in the AVIATION OCIP. The AVIATION OCIP is an insurance program that insures the Authority, eligible and enrolled Construction Managers, Contractors and subcontractors, and other Authority designated parties for Work performed at the Job Site. Certain Contractors and subcontractors are excluded from the AVIATION OCIP. These parties include, but are not limited to, the professional services of architects, engineers, surveyors, and consultants. The AVIATION OCIP Insurance Manual is referenced and incorporated into applicable contracts.

2.7.2 Authority Provided Coverage: The Authority has implemented the AVIATION OCIP to provide certain insurance coverage for Contractors and subcontractors of all tiers performing construction and certain maintenance work on designated projects at Ronald Reagan Washington National Airport, Washington Dulles International Airport, or the Dulles Toll Road (collectively referred to as the "Job Site"). All such Contractors, subcontractors, subcontractors of any tier must enroll in the AVIATION OCIP if they are performing work at the Job Site. Coverage under the AVIATION OCIP includes:

A. General Liability, including terrorism

B. Excess Liability, including terrorism

C. Contractor's Pollution Liability (including asbestos abatement under pollution coverage only)

D. Builder's Risk, including terrorism

2.7.3 Contractor Provided Coverage: The coverages afforded under the AVIATION OCIP do not include all the insurance needed by Contractors and subcontractors. The AVIATION OCIP does not cover Contractor's or subcontractor's motor vehicles used in the performance of the work, whether kept, used, or operated on or off the Job Site. Employee injuries on or off the Job Site are also not covered by the AVIATION OCIP. The AVIATION OCIP will not cover Contractor or subcontractor property, tools, and equipment. The insurance requirements are detailed in Section 5 of the AVIATION OCIP Insurance Manual.

2.7.4 Costs: Contractors are required to procure and maintain at their expense insurance coverage to protect against losses that occur on and off the Job Site or are otherwise not covered by the the AVIATION OCIP and must

submit Certificates of Insurance as required by their contract and the AVIATION OCIP Insurance Manual. The Authority will pay insurance premiums for the AVIATION OCIP coverage described in the AVIATION OCIP Insurance Manual. Each bidder, the Contractor and its subcontractors, is required to exclude from its bid price and requests for payment, the cost of insurance coverages that will be provided by the Authority.

2.7.5 Safety Obligations: Safety on the Job Site is important to the Authority. To encourage adherence to safe practices by all parties, the Authority, at its discretion, may require the Contractor, and on behalf of its subcontractors of any tier, to pay safety obligations in varying amounts for each claim submitted by the Contractor or subcontractor of any tier. These safety obligations are not covered by the AVIATION OCIP insurance policies and shall remain uninsured by the Contractor and its subcontractors of all tiers. Additional details are located in the AVIATION OCIP Insurance Manual.

2.7.6 Verification of Required Coverages: All Contractors and subcontractors of any tier whether considered enrolled or excluded must provide verification of insurance coverage via the AVIATION OCIP web portal prior to mobilization and within three days of any renewal, change, or replacement coverage. All required insurance coverages must include waivers of subrogation and additional insured statuses as noted in the AVIATION OCIP Insurance Manual and in the contract.

2.7.7 Incident Reporting: It is the responsibility of the Contractor to report all incidents, injuries, or property damage at the Job Site to the AVIATION OCIP Safety Consultant within 24 hours of occurrence.

2.8 Safety

2.8.1 General: The objective of the Authority safety policy is to achieve an accident-free project; therefore, safety must be an integral part of each project. The achievement of this objective is possible only through planning and maintaining safety awareness in all phases of the day-to-day work operations during design and construction. Specific safety requirements and standards governing A/E consultants and construction contractors are contained in each Authority design and construction contract. The Authority Construction Safety Manual is also referenced and incorporated into these contracts.

2.9 Security

2.9.1 General: The Authority has established mandatory security procedures to provide A/E consultants and construction contractors with operating guidelines during design and construction operations within the secured areas of the airports. The objectives of these procedures are intended to cover all security functions related to vehicle and equipment operations and personal identification while on the airports.

2.10 Quality

2.10.1 General: Architect/Engineers (A/Es) must establish a quality control program for their design activities on all Authority projects. **Section II**, defines guidelines for (1) establishment of a formal plan for; and (2) implementation of a quality control program during all phases of the design effort. Contract documents developed by A/Es must reflect that construction contractors for Authority projects are required to establish project Quality Control Programs and to perform inspection and tests on many items of work, including that of subcontractors. Within the program the Contractor is required to establish measures that shall ensure conformance to applicable specifications and drawings with respect to the materials, workmanship, construction, finish, functional performance, and identification. The Contractor Quality Control Program must specify surveillance and tests of the elements identified in the technical provisions of the Contract Specifications. The construction document shall specify all activities to be performed by the contractor as Quality Control. The Construction Contractor Quality Control, (**Section III**) provides guidelines for A/E incorporation of these requirements in the Contract Documents. The A/E

may be directed to evaluate a construction Contractor's Quality Control Program.

2.11 Accessibility

2.11.1 General: The Authority requires that its facilities and services be designed to accommodate disabled individuals. The design for all Authority and Tenant projects shall conform, as a minimum, to the Americans with Disabilities Act (ADA).

2.12 Full and Open Competition

2.12.1 General: The Authority is committed to acquiring contract supplies and services by full and open competition through the use of established procedures. For all direct procurement by the Authority, the following policies and guidelines are mandatory. Tenants are encouraged to strive for open competition, but their own direct procurement of services and goods need not comply with the following policies and guidelines.

2.13 Brand Name or Equal Requirements

2.13.1 General: When it is determined to be impractical or undesirable to develop a generic specification, three brand names should be specified to convey the general style, type, character, and quality of the article desired. Unless otherwise provided in the solicitation, the naming of certain brands, makes or manufacturers does not restrict vendors to these specific brands or manufacturers named. To the extent practicable, the characteristics of the item being requested that are the most important to the Authority, salient characteristics, should be identified. Any article that the Authority, at its sole discretion, determines to be the equal of that specified, considering quality, workmanship, economy of operation and suitability for the purpose intended, may be accepted. In such cases the language to follow shall be "... or as acceptable to the Authority" NOT "... or equal". The burden of proof of product equality lies with the supplier or installer of the product and not with the Authority. In certain instances, a specific product, because of performance, maintenance or compatibility characteristics may be identified as the only acceptable product for a particular use in a project. In all such cases where a sole product is specified, prior approval for use of the product must be obtained from the Authority, utilizing the "Proprietary/Sole-Source Justification" procedures established by the Authority. The Authority has pre-approved certain Proprietary/Sole-Source procurement items that are listed in the appropriate sections of the Design Manual and its supporting volumes. A list of such pre-approved Sole-Source items appears at the end of this section.

2.13.2 Proprietary/Sole-Source Products

2.13.2.1 Specification Guidelines: In general, A/Es shall take into account the commercial availability of materials and processes, and shall promote competitiveness among suppliers and installers.

A. Fabrication shall use industry stock components whenever possible to encourage broad participation in public procurement and to help ensure future availability of replacement parts.

B. Proprietary/Sole-Source materials, hardware or fabrication methods shall be avoided unless justifiable for the particular application.

2.13.2.2 Airports Authority Review: Justification for and implementation of dual-source and proprietary/sole-source or specifications are subject to review and approval of the Authority for all Authority-procured projects.

2.13.2.3 Guidelines for Proprietary/Sole-Source Justification: Proprietary/Sole-Source Justifications must not contain self-serving statements. They must set forth concise facts about the following:

A. What are the minimum requirements of the procurement? Material evidence should be presented verifying these minimum requirements.

B. What unique capabilities do the proposed vendor/contractor possess which makes it the only company capable of meeting these minimum requirements?

C. Has market search or other type of solicitation been conducted? Material evidence should be presented verifying that such a search was conducted and that the proposed vendor/contractor was the only company meeting the minimum requirements of the procurement.

D. Has the item or service been previously procured? If yes, is it from the same vendor/contractor? If this is a continuation of a previous effort by the same vendor/contractor, demonstrate why no other sources of supply are available.

E. Are there a technical data package, specification, engineering description, and statement of work or purchase description available that is sufficient for competitive procurement? If not, is one being developed? If not, why not? How much lead-time is required to develop it? Has a cost-benefit analysis been conducted to determine whether it is advantageous to the Authority to buy or develop such information? If not, what evidence is available to demonstrate why this analysis is not needed?

F. Can individual components of the procurement be competitively procured? If so, what steps have been taken to do this?

G. Does the procurement result from an unsolicited proposal? If so, who first described the problem addressed by the unsolicited proposal? Demonstrate why the proposed vendor/contractor is the only one capable of performing the service or providing the item.

H. What material evidence exists that the Authority would be injured if the non-competitive procurement were not made? This includes estimates of additional costs incurred and/or threats to critical schedules (including when the procurement need was first identified, reasonableness of delivery schedules, etc.).

I. What steps are being taken to foster competition in subsequent procurement of this product or service?

J. Provide a concluding statement that the proposed Proprietary/Sole-Source is the only known source that can satisfy Authority requirements. Statements such as, “No other sources are considered qualified,” or “The XYZ Company is considered best qualified,” shall not be considered a basis for Sole-Source Justification.

2.13.2.4 Proprietary/Sole-Source Acquisitions: Proprietary/Sole-Source acquisitions are proper under the following circumstances:

A. Unique Product or Service: Only one company (or individual) can provide the items and services sought by the procurement. This condition is usually based on the fact that a company has proprietary rights in the product/service being sought, or it has a unique product/service that alone will satisfy Authority minimum needs. However, unique does not mean “desirable” or “nice to have.” It means that this product/service is the only one available. This must be supported by facts and demonstration of indisputable need for the product/service.

B. Re-procurement data: If suitable data (adequate specifications/purchase descriptions) for competition is not available and can be demonstrated, there is no need for a search for other sources. However, efforts to obtain suitable data or to draft adequate specifications/purchase descriptions for future competition shall be described.

C. Compatibility and/or interchangeability: Only one company can provide an item that is compatible and/or interchangeable with existing equipment. However, the absolute need for compatibility must be established and the justification must include an

explanation of how it was determined that no other equipment is compatible and/or interchangeable.

D. Unique qualifications: Only one company has the unique qualifications needed to perform the required effort. This is a rare condition and must be based on one-of-a-kind facilities, or personnel who have provable advantages over all others. In such cases, the conclusions must be supported by well-documented facts.

E. Time: Only one company can meet the required delivery or performance schedule. The validity of the schedule -- and the consequences or impact of not meeting it -- must be shown. Also, the method by which the recommended source was shown to be capable of meeting the schedule must be documented. In other words, it must be demonstrated that acquisition from other than the proposed Sole-Source work present unacceptable risks or delays to the Authority and that acquisition from the Sole-Source would not present such risks. If this can be established, there is no need for a search for other sources.

2.13.2.5 Sole-Source acquisitions may not be proper under the following circumstances:

A. Administrative Delay: Time alone is an invalid reason for non-competitive acquisitions if the Authority unreasonably delays the acquisition action or was aware of the requirement early enough to obtain competition reasonably. However, if program approvals or funding are withheld from the requiring agency until a point in time too late for competitive acquisition, the time factor can be a justifiable basis for Sole-Source. However, this must be stated clearly in the justification, with the relevant facts set forth. It is emphasized that, in many cases, requirements can be solicited for and negotiated prior to actual receipt of funds; therefore, a statement that funds were not available may not be valid in such cases. Should funds be delayed, consult with contracting, legal, and comptroller personnel.

B. Superior Product: This is extremely difficult to justify. The originator of the Sole Source Procurement request must show unequivocally that both the superiority of the product and the need for the superior product before this can be a valid basis for Sole-Source.

C. Lower Price: The lowest price can be established only through competitive acquisition. Notwithstanding published prices or verbally promised prices, any offeror has the prerogative to sell its products or services at less than the advertised or promised prices.

2.13.3 List of Approved Proprietary/Sole-Source Items: Following is a list of approved Sole-Source items. This information is provided as an information resource and will be updated annually.

PROPRIETARY/SOLE-SOURCE ITEMS IN THE AUTHORITY *DESIGN MANUAL*

No.	Item	Manufacturer	Notes
2000 #1 2005 #1	Security Gate Operators	Stanley Linear Access Model 570	Multiple suppliers
2000 #2	Hypalon Roofing	Stevens	Stevens is one of a few manufacturers of Hypalon single-ply roofing
1 2000 #3	Locksets	Stanley-Best Access Systems	
2 2000 #4	Auto hand dryers	Excell, Model 76C	At IAD only; multiple supplies
2000 #5	Public conveyances.	Schindler Corp.	At DCA only
2000 #6	Public conveyances.	Montgomery Elevator Corp.	At IAD only
2000 #7	Gas piping	Plexco or Driscollpipe	At IAD only, as an alternate to Sch. 40 black steel
2000 #8	Mechanical heat-exchanger control systems	Siemens Building Technologies, Landis Division	
3 2000 #9	High temperature hot water plug valves	Nordstrom, model "Dynamic Balance"	At IAD only; multiple suppliers
4	High temperature hot water wedge plug valves	Pacific Valves, model "Wedgeplug" Stockham Valves & Fittings	At DCA only; multiple suppliers Sole Source Justification written for these valves in the B/C terminal list, and **Pacific Valves** is not the manufacturer sole sourced in this dcoument
5 2000 #11	Energy Management and Control Systems (EMCS) Environmental Controls	Siemens Building Technologies, Inc.	
6 2000 # 12	Backflow preventers	Watts, Model 909, type RPZ	Multiple suppliers
7 2000 #13	Fire Department Connection double-check valve backflow preventers	Watts, Model 709	Multiple suppliers
8 2000 #14	Water supply gate valves	Mueller Company	At IAD only; Multiple suppliers
2000 #15	Water Closets	Kohler or American Standard	Blow-out type only, multiple suppliers
2004 #10	Water Closet	Hydrotek Model H-8000C-A; Urinal - Hydrotek Model H-8000C-B1 (exposed unit; Urinal – Hydrotek Model H-8000C-D1b (concealed units); Water closet with back spout – Hydrotek Model H-8000C-CB	At DCA only; multiple suppliers
2000 # 16	Flush Valves	Hydrotek, Model H-8000	At DCA only, multiple suppliers

No.	Item	Manufacturer	Notes
2000 #17		Sloan	At IAD only; multiple suppliers
9	Public toilet room flush valves	Sloan	At IAD & DCA; multiple suppliers
10	Public toilet room faucets	Sloan	At IAD & DCA; multiple suppliers
2000 #18 2000#19		Hydrotek, Model H-1000 Sloan	At DCA only; multiple suppliers At IAD only; multiple suppliers
11 2000 #20	Non-public/employee water closet flush valves	Sloan Royal, Model 110	At IAD & DCA; multiple suppliers
12 2000 #21	Non-public/employee urinal flush valves	Sloan Royal, Model 186	At IAD & DCA; multiple suppliers
13 2000 #22	Thermal meters	Data Industrial, Model 2300	At DCA only; multiple suppliers
2000 #23	Natural gas tenant meters	Equimeter Company	At IAD only
2000 #24 2003 #21	Natura gas tenant meter reading recorders	Reynolds Recor Model 843 BVC Reynolds Recor Model 323 PT LVC	At IAD on large meters only
14 2000 #25 2002 #28 2004 #19	Domestic water meters	Badger Recordall, Turbo Series Badger Recordall, Turbo II Utility Type Equimeter Turbo II Utility type	On lines equal to or greater than 2 inches diameter On lines equal to or greater than 2" Ø At IAD as an alternate to Badger
15 2000 #26 & #28	Domestic water meters	Badger Recordall bronze disc type Equimeter	On lines less than 2 inches diameter At IAD only as an alternate to Badger
16 2000 #27	Domestic water meter remote reader devices	Badger Read-o-Matic	Where units are inaccessible or not readily accessible
17 2000 #29	Permanent meter monitoring	Badger Orion Model Recordall Transmitter Register (RTR) Badger Access Plus Automatic Meter Reading System	At IAD only
18 2000 #30	Fire hydrants	American Darling, Type B-62-B or Kennedy "Guardian"	At DCA only
19 2000 #31	Fire hydrants	Mueller Company Super Centurion Model, Series A-423	At IAD only
20 2000 #32 2002 #32	Post Indicator Valves	Mueller Company, Adjustable Vertical Indiction Post, Model A-20806 and Gate Valve 2360 series, Model P-2360 Meuller Company, Model A-20801 (post) and P-2360 (valve) Meuller Company, Super Centurion Model, Series A-423	At IAD only
21 2000 #33	All pipe couplings between old and new fuel piping	Plidco, Model "Weld+Ends"	
22 2000 #34	Fuel Pits	Dabico, Inc.	
23	Tightness control leak detection system	Hansa Consult North America tightness Control System	
24 2003 #33	Hydrant fuel valves	Meggitt Fuelling Products Theim	At IAD only
25	Electric motor operators for fuel system isolation valves	Rotork	

No.	Item	Manufacturer	Notes
26	Microprocessor based control system	Rotork	
27 2000 #35	EFSO components for multiplexed systems	Siemens Cerberus Pyrotronics "MXL"	
28	Watt-hour meters	By "E-Mon"	At DCA only
29	Metering at substations	Square-D Powerlogic	At DCA only
30 2000 #38	Metering at substations	Square-D PowerLogic ION 7330 Digital 3 phase Power Measurement Limited, Model 7330 Digital 3 phase	At IAD only
31	Underground compression-type connectors for all grounding systems and ground rods	Burndy Corporation	As an alternate to exothermic welding of all connections
32	Apron lighting	1000W, HPS, Quality Lighting, Model 117-24-F-FX-HPS1000 Model RF 2180 mounting brackets.	At IAD only
2002 #40	Exterior lighting	1000W, HPS, Sterner/Infranor Model 575 with Model 872 optics	At IAD only
33	800 - MHz. Radio systems and supplemental components Procurement Justification for Sole Source (Reference Section I, 4.13.2, Item 41, of the Design Manual) signed by David Jones 2/24/03	Motorola or Motorola-approved	
34 2000 #40	Integrated fire alarm, detection, control, and monitoring system	Siemens Cerberus Cerberus Pyrotronics Company, MXL System	
35 2000 #41	Bus shelter	Columbia Equipment Co. Shelter No. 8005DSP 8005SPD	Or as acceptable to the Authority; At DCA Only Or approved equal allowed
36	Trash receptacles	Shall be Canterbury International "Pennsylvania Avenue" model	Match to Sole Source documents for new Terminal B/C
37 2000 #43	Ash urns	United Receptacle, Model No. 1000	Multiple suppliers
38 2000 #44	Water coolers	Halsey Taylor, Model OVL-ESR	Multiple suppliers
2000 #45	Waste receptacles	United Metal Receptacle Corp. Model No. R1536SC GL	Multiple suppliers
39	Sign Making Equipment	Gerber Scientific Products	
40	Futura Typeface	URW Font Foundry	DCA Signage
41	Saarinen Typeface	Original – Saarinen, Digital – House Industries	IAD Signage in the Historical Main Terminal
42	Frutiger Typeface	Linotype Font Foundry	IAD Signage
43	Helvetica Typeface	Haas Type Foundry	IAD Signage by Authority approval

No.	Item	Manufacturer	Notes
2000 #46	Typefaces	URW Company or Gerber Scientific Products	Multiple suppliers
44	Window shades	MechoShade Systems ThermoVeil, Type 1300, Dense Basket Weave, Color No. 1316 "Eggshell"	
45	Queue control	Brass Smith Beltway Magnum Queuing System	Or as acceptable to the Authority
46	Counter inserts tops	Westinghouse Micarta Color No. 91M54 E, "Weathered Gray," Velvet texture	
47	Ticket counter position signs vinyl lettering	Shall be on Visiontron standard dark burgundy inserts with Standard Layout OTC series white	Possible match to Sole Source documents for New terminal B/C.
48	Kiosk furnishings	Herman Miller "Equa" stool	
49	Bridgewell café seating	Knoll Handkerchief Chair	
50	Bridgewell café tables	Johnson J91 satin chrome bases	
51	Bridgewell café table tops	Wilsonart "Gray" HO TufSurf 11 1500 N-V laminate 75 BVN top with "White" Endure Edge Same for Concourse restaurant tables	
52	Concourse restaurant seating	Knoll Handkerchief Chair	
53	Poster racks	Lavi Industries, Model Directrac Sign Frame in Satin Chrome with Standard heavy weighted "H" base in Satin Chrome	
54	Newspaper racks	GeoRack, Inc.	
55 2000 #59	Exterior phones	Types 540 B/C, manufactured by King Products	Multiple suppliers Match to Sole Source documents for New Terminal B/C
56 2000 #60	Ticket Level café tables	Shall be ICF Variations tables	Multiple suppliers
57 2000 #61	Ticket Level café chairs	Knoll Bertoia chairs and bar stools	Multiple suppliers
58	Parking lot toll booths	Par-Kut International Inc., Model No.75	
59 2000 #63	Bus shelters	Columbia Equipment Co., Inc. Double-Dome Model RAFCO Corporation Double-Dome Model	At IAD Only
60	Curtainwall in-fill panels	"Alucobond" panels, manufactured by Alucobond Technologies or "Reynobond PE," manufactured by Reynolds Building Products	
61	Teak wood sliding panels	Hafele Model No. 103H/150 HAWA hardware	Or as acceptable to the Authority;
2000 #66	BAS System	Siemens Building Tech., Landis Division	All meters must interface with Landis system; all HVAC control panels must interface with Landis system

No.	Item	Manufacturer	Notes
2000 #67	Fire Alarm system	Cerebus Pyrotronics MXL	
62	Transition marble flooring	CATCO, color "Calcutta Gold," polished finish	
63	All tenant lock cores	Stanley-Best Access Systems	
2000 #70	Queue Control	Brass Smith, "Beltway Magnum Queuing System"	
64 2000 #51	Public hold room seating	Eames Tandem Sling seating by Herman Miller	Match to Sole Source documents for New Terminal B/C
65 2000 #72	Final CADD product for design submittals	Bentley Microstation format, Ver. J or AutoDesk Auto CAD V.14 or higher Bentley Microstation format, Ver. 4.0	
2000 #73	All compressed files	PKZIP self-extracting files	
66	ApC/8X Intelligent Access Control and Alarm Monitoring Panels	Sensormatic Electronics Corporation Nos. 66, 67, and 68. A sole source justification was written for Terminal B/C. Manufacturer was AACS, and Panasonic for CCTVs.	Access control system panels are required to be compatible with existing access control system/spares stores
67	Access Control System Card Readers Procurement Justification for Sole Source (Reference Section 2.13.2.75 of the Design Manual) signed by David Jones 2/24/03	Sensormatic Electronics Corporation Cardreader Pinpad – Software House, Inc. RM2-MP.	Access control system card readers are required to be compatible with existing access control system/spares stores
68	Closed-Circuit Television (CCTV) Cameras Procurement Justification for Sole Source (Reference Section 2.13.2.76 of the Design Manual) signed by David Jones 2/24/03	Sensormatic Electronics Corporation (American Dynamics)	Remotely controlled CCTV cameras are required to be compatible with existing CCTV system controllers/spares stores
69	Enterprise MP Digital Video RecordersTM Procurement Justification for Sole Source (Reference Section 2.13.2.77 of the Design Manual) signed by David Jones 2/24/03	Loronix Information Systems, Inc.	Digital video recording equipment must be compatible with the existing networked system currently being installed
70	Master Clock	Chrono - Log Corporation, K-Series Time Management System	Master clock extension is required to be compatible with existing Chrono-log master clock system
71	LCD rear projection display	Clarity Visual Systems, Model SCN-4030S-GC	MUFIDS extension is required to be compatible with existing page format and display designs, to include size, format and physical dimensions; Compatibility also needed with spares stores
72	Incorporated Application Software	INFAX	MUFIDS software must be compatible with existing INFAX software residing on the MUFIDS head-end

No.	Item	Manufacturer	Notes
73	Master Clock	Displays - Chrono-log Corporation model L series (4 inch red characters)	Master clock extension within MUFIDS casework is required to be compatible with existing displays/spares stores
2003 #78		Chrono-log Corporation, K-Series Time Management System	Master clock extension is required to be compatible with existing Chrono-log Master Clock system
2003 #79	Clarity Visual Systems	Model SCN-4030S-GC, LCD Rear Projection Display	MUFIDS extension is required to be compatible with existing page format and display designs, to include size, format and physical dimensions; Compatibility also needed with spares stores
74	(Hardware and Software)	*i*MUSE System	CUTE extension is required to be fully compatible with existing *i*MUSE hardware and software
2003 #80	Incorporated Application Software	INFAX	MUFIDS software must be compatible with existing INFAX software residing on the MUFIDS head-end
75	Water Treatment Chemicals	Ondeo-Nalco	Water treatment chemicals and water treatment chemistry monitoring, at IAD only.

2.14 Disadvantaged Business Enterprise (DBE) Participation

2.14.1 General: The Authority Disadvantaged Business Enterprise (DBE) program applies to federally-assisted contracts. This program requires offerors to make every good faith effort to achieve DBE goals that the Authority has established for these contracts. DBEs are small businesses that are owned and controlled by one or more socially and economically disadvantaged individuals (women and minorities who are African Americans, Hispanic Americans, Native Americans, and Asian-Pacific Americans, are presumed to be socially and economically disadvantaged). For these federally-assisted projects, the Authority will establish and annually review overall goals for the amount of Authority contracting to be placed with DBEs. DBE participation may be achieved through first tier subcontracting/subconsulting and/or joint venture efforts with prime contractors.

2.15 Equal Opportunity and Minority and Women Business Enterprise (MBE/WBE) Participation

General: The Authority is committed to achieving significant participation in its contracting programs by business enterprises that are owned and controlled by minorities and women (MBEs and WBEs). The Authority will indicate the voluntary level of MBE/WBE participation it desires in individual contracts. All offerors are encouraged to take active steps to maximize MBE/WBE participation, including the achievement of this voluntary level in their contracts. No person or firm shall be discriminated against because of race, color, national origin or sex in the award of Authority contracts. Additionally, contractors shall not discriminate on the basis of race, color, national origin or sex in the performance of Authority contracts.

2.16 Local Disadvantaged Business Enterprise (LDBE) Participation

2.16.1 General: It is also the policy of the Authority to achieve significant contract participation in its contracting programs by Local Disadvantaged Business Enterprises

(LDBE). LDBEs are businesses that meet the Authority designated geographic and small business size standards, which is defined in the Authority Equal Opportunity Programs documents. The Authority will set-aside a significant portion of its contract opportunities for LDBEs. The Authority will require offerors to meet mandatory LDBE participation requirements in many of its contracts. Some contracts will be set-aside 100% for LDBEs. It should also be noted that in most instances MBE/WBE firms also meet the LDBE program eligibility criteria and can therefore be used to meet LDBE participation requirements. The Authority Equal Opportunity Programs Office is available to provide assistance in identifying DBE/MBE/WBE/LDBE firms to participate on Authority contracts.

2.17 Maintainability and Operability

2.17.1 General: A primary consideration in design of all Authority facilities and utility systems is the anticipated normal operation and maintenance. New facilities must be compatible with existing airport maintenance activities and procedures.

2.18 Building Codes

2.18.1 General: The Virginia Uniform Statewide Building Code (USBC) applies to all construction, alterations and repairs on Authority property. The Metropolitan Washington Airports Authority, through the Office of Engineering, is the "Authority Having Jurisdiction" on airport property for the enforcement of the USBC. Plan reviews, construction permitting, and inspections are performed by Virginia certified professionals in all applicable disciplines and trades in accordance with Commonwealth law.

2.19 Federal Regulations

2.19.1 General: The regulations of 49 CFR Part 192; Transportation of Natural or Other Gas by Pipeline, Minimum Federal Safety Standards, apply to all designs, construction, operations, and maintenance on the natural gas distribution lines at Washington Dulles International Airport. The natural gas distribution lines are defined as all natural gas lines upstream from any tenant gas meter. The Authority, as a master meter system operator, is the "Authority Having Jurisdiction" for the design and construction of natural gas distribution lines at Washington Dulles International Airport.

2.20 Adherence to Factory Mutual Standards

2.20.1 General: It is Authority policy to provide facilities that meet or exceed all current life and fire safety codes and standards. In keeping with this policy, Architects/Engineers should make every effort to select materials, systems and equipment for use in Authority facilities that meet these standards, including those published by the Factory Mutual Global (FM).

2.21 Tenant Projects

2.21.1 General: The Authority desires to assure that all work performed on the airports is accomplished in a manner consistent with the requirements outlined in this Design Manual. All renovations or revisions within tenant leased areas in Authority operated or maintained facilities will require full compliance with this manual and Authority approval. Depending upon the size, complexity, and character of the work, the design phase and submittal requirements for a project may vary. As a minimum, all tenant requested work must receive schematic and final design approval and requires the preparation and submission of Project Record documentation. For any work resulting in substantial exterior modifications to Authority grounds or placement or relocation of utilities, a final topographic survey prepared according to Authority field engineering procedures and using the Authority Survey Control System, specified in **Section III,** is required. Additional intermediate submittals may be required. Further discussion of this is available in **Section II,** – The Design Phase. No construction or alteration shall be permitted without the approval of the Authority. Refer to **IAD Vol. 1** through **IAD Vol. 3** for tenant projects associated with the Main Terminal or the Concourse B Facility or both at Washington Dulles International Airport. These volumes

now include separate volumes of standards for each of these facilities.

2.22 Value Engineering

2.22.1 General: The Authority encourages the application of value engineering principles on all projects. Formal Value Engineering workshops may be conducted during design for any project when deemed appropriate by the Authority.

2.23 Partnering

2.23.1 General: The Authority encourages the incorporation and use of partnering principles for all construction contracts. Formal partnering language will be added to each project contract when deemed appropriate by the Authority.

CHAPTER 3 Interface with Other Organizations

3.1 Public Utility Companies

3.1.1 Ronald Reagan Washington National Airport receives services from several public utility sources as follows:

Water

Army Corps of Engineers
Water Engineering Services
Washington, D.C. 20001
(202) 764-2716

Electric

Virginia Power
907 Glebe Road
Alexandria, VA 22305
(703) 838-2241

Sewer

Arlington County Department of Public Works/Water Pollution District
3401 Glebe Road
Arlington, VA 22602
(703) 228-3672

Natural Gas

Washington Gas Company
6801 Industrial Road
Springfield, VA 22151
(703) 750-1000

Telecommunications (to Airport minimum point of presence)

Verizon
2980 Fairview Park Drive, 6th Floor
Falls Church, VA 22042
(703) 954-6298

3.1.2 Washington Dulles International Airport receives services from several public utility sources as follows:

Water

Fairfax County Water Authority
Technical Resources
8560 Executive Park Ave.
Fairfax, VA 22031
(703) 698-5600

Loudoun County Sanitation Authority
800 Harrison Street, SE
Leesburg, VA 20175
(703) 771-1095

Electric

Dominion Virginia Power
3901 Fair Ridge Dr.
Fairfax, VA 22033
(703) 359-3057

Sewer

D.C. Department of Public Works
5000 Overlook Avenue, S.W.
Washington, DC 20001
(202) 645-6299

Loudoun County Sanitation Authority
800 Harrison St., SE
Leesburg, VA 20175
(703) 771-1095

Natural Gas (to and including Airport gas meter Stations)

Columbia Gas Services, Inc.
7645 Limestone Dr.
Gainesville, VA 20155
1-800-543-8911

Telecommunications (to Airport Minimum point of presence)

GTE Telephone Operations
9401 Peabody Street
Manassas, VA 22110
(703) 369-9565

3.1.3 Both Airports also manage certain interior and exterior utilities that are often used by tenants:

Telecommunications (On Airport)

Airports Communication System (ACS) Contractor
(703) 417-8300

Cable TV

Metropolitan Washington Airports Authority
Telecommunications Systems
Washington, DC 20001
(703) 417-8760

3.1.3.1 Metropolitan Washington Airports Authority manages the natural gas infrastructure downstream of gas meter stations at the Washington Dulles International Airport. There are three gas meter stations as follows:

A. East Gas Meter Station near Fuel Farm.

B. South Gas Meter Station near Gate 313.

C. Sully Gas Meter Station near Fire Pump House.

3.1.3.2 Contact the following for all information regarding the use of natural gas downstream of meter at the airport:

Metropolitan Washington Airports Authority
Utility Services Division
(703) 572-2830

3.1.4 Utility Locating and Marking: The A/E shall be aware of the Utility Locating and Marking requirements for all construction contracts at both Ronald Reagan Washington National Airport (DCA) and Washington Dulles International Airport (IAD), The A/E must ensure that these requirements are included in each construction project involving excavation or drilling of any type.

3.1.4.1 The A/E has responsibility to show the location of existing underground utilities on the plans. Where possible, the information provided shall locate the utility horizontally and vertically. The A/E shall obtain direction from the Contracting Officer's Technical Representative (COTR) regarding the Authority's expectations in this regard, because it varies from one project to another. It may be prudent for the A/E to employ an underground utilities location subconsultant, because relying on the Contractor to locate utilities not shown on the plans can be expensive and dangerous.

3.1.4.2 DCA Requirements:

A. The Contractor shall employ an underground utilities location subcontractor to locate and mark the horizontal location of all utility lines that might be impacted by construction activities including but not limited to the following:

Electric power lines
Natural gas lines
Sanitary sewers
Storm sewers
FAA communications, signal, and security lines
Runway lighting lines
Water supply piping
Fuel lines
Telecommunication lines

B. The Contractor shall contact the Authority's Airport Communications System (ACS) Help Desk at (703) 417-8300 a minimum of 72 hours prior to starting activities, that disturb the ground.

C. The Contractor shall contact the DCA Work Order Desk at (703) 417-8063 a minimum of 72 hours prior to starting activities that disturb the ground.

3.1.4.3 IAD Requirements:

A. The Contractor shall employ an underground utilities location subcontractor to locate and mark the horizontal location of all utility lines that might be impacted by construction activities, including but not limited to the following:

Electric power lines
Natural gas lines
Sanitary sewers
Storm sewers
FAA communications, signal, and security lines
Runway lighting lines
Water supply piping
530 KHz AM radio line - Parking Lot Availability Notification System -buried cable parallel to the Airport Access road. The system utilizes antennas on the Airport thus there are no buried cables for this system within the fenced portion of the Airport property.
Fuel lines
Telecommunication lines

B. The Contractor shall contact the Authority's Airport Communications System (ACS) Help Desk at (703) 417-8300 a minimum of 72 hours prior to starting activities that disturb the ground.

C. The Contractor shall contact the IAD Engineering & Maintenance Utilities Services Division at (703) 572-2830 a minimum of 72 hours prior to starting activities that disturb the ground.

3.2 Coordination and Interface with Other Organizations

3.2.1 During the design process, coordination with organizations, such as the following may be required:

Federal Aviation Administration
Environmental Protection Agency
U.S. Customs and Border Protection
U.S. Citizenship and Naturalization Services
U.S. Department of Agriculture
U.S. Public Health Service
U.S. Army Corps of Engineers
National Park Service
National Capital Planning Commission
Advisory Council on Historic Preservation
Virginia Department of Transportation
Virginia State Historic Preservation Officer
Metropolitan Washington Airlines Committee
Virginia State Division of Soil and Water Conservation
Virginia State Water Control Board
Virginia State Waste Management Board
Arlington County Department of Human Services
Loudoun County Health Department
Washington Airports Task Force
Washington Metropolitan Area Transit Authority
Airport Tenants
Air Carriers
Fuel System Management Contractor
Virginia Department of Health
Transportation Security Administration
State Corporation Commission

(This Page Blank)

SECTION II: Design Procedures

CHAPTER 1 Architect/Engineer (A/E) Contract Management

1.1 Definition of Work

1.1.1 Statement of Work: Architect/Engineer (A/E) scope of work definitions is provided in the form of a Statement of Work (SOW) which describes the project and identifies the required services and product deliverables that the A/E is to provide during the project design phases. The SOW defines the project in the following format:

Project Overview
Project Scope
Required Services/Deliverables
CADD Submittal Requirements
Quality Control Guidelines
Design and Construction Schedule
Construction Cost Estimate (the Budget)

1.1.2 Design Cost Proposal: Based upon the SOW, the A/E shall be requested to submit a design cost proposal. The proposal will become the basis for negotiations between the A/E and the Authority. The proposal shall include a work plan, fee proposal, proposed design schedule, quality control plan and other certifications required by the Authority as set forth in the Solicitation Provisions of the Request for Proposal. The proposal should be in sufficient detail to accurately reflect the manner in which the work is to be performed. Detailed design cost proposal forms will be provided for A/E use in preparing the proposal. As a part of the development of the technical and cost proposals, the A/E shall review the scope of work in light of their experience and knowledge, and provide the Authority with any ideas or recommendations with respect to the work outlined in the SOW that will clarify and/or improve the final product either technically, functionally, and/or financially. Normally, a pre-proposal meeting will be held with the A/E to review applicable administrative and project specific requirements. The A/E shall acquire a copy of the Authority Design Manual and appropriate Airport Safety, Construction, and Orders & Instructions for the relevant airport to allow the A/E to fully understand Authority requirements and procedures.

1.2 Security Requirements

1.2.1 General: Staff members of the A/E and their subconsultants who will be involved on the project on an ongoing basis are required to receive appropriate airport security training, clearance and identification badges in order to maintain access to numerous facilities at both Ronald Reagan Washington National Airport and Washington Dulles International Airport. Information on the security clearance requirements and procedures can be obtained by contacting the Authority Design Department Functional Group Manager or the appropriate Airport's Pass & Identification Office.

1.3 Design Schedules

1.3.1 General: Normally, within 30 calendar days of the Notice-to-Proceed (NTP), the A/E shall furnish the Authority with a preliminary design schedule for the execution of its services. The schedule shall include milestones for submission dates, review periods and when and what Authority-supplied data is to be furnished to the A/E. The final, agreed-upon design schedule is to be updated as a part of each design review submission. When, during the execution of design work, milestone dates of the design schedule appear to be in jeopardy, the A/E shall be requested to explain the delay or potential delay and submit an alternative course of action to achieve schedule recovery. The A/E shall identify actions and/or decisions required by the Authority or others that may adversely affect the schedule. The Authority typically uses Primavera software and prefers that A/E prepared schedules are compatible. Each submittal should include schedule information in CD format.

1.4 Payment Procedures

1.4.1 General: During design and procurement phases, A/E payment periods will normally be tailored to the contractually established submission of deliverables, and should be invoiced and will be paid upon the Authority acceptance of the particular submittal. The Contracting Officer's Technical Representative (COTR) will verify invoices for payments and all invoices and payments are processed by the Contracting Officer and the Procurement Department of the Authority. For the provision of Construction Phase services, if required to provide such service, the A/E shall submit invoices on a monthly basis. Invoices shall accurately reflect services rendered and reimbursable expenses for the appropriate level of completion. The A/E also shall submit with its invoices a report on the services rendered and personnel providing services, and of its expenditures to all its subconsultants and partners, including those expenditures to LDBEs/DBEs/MBEs/WBEs. The A/E shall correct design deficiencies at no expense to the Authority.

1.5 Quality Control (QC)

1.5.1 Quality Control Program: The QC Program shall as a minimum consist of an organization, a QC Plan, Coordination and Mutual Understanding Meeting, Phases of Control, submittal review, coordination, certifications, and documentation of the program.

1.5.2 Quality Control Manager: The A/E shall establish and maintain a Quality Control organization of scope and character as to provide control over all activities. This organization as a minimum will include the Quality Control Manager. The A/E shall appoint an individual to be the QC Manager for design. This individual shall have not less than 5 years design experience on similar type and scope projects. This individual will report Quality Control issues directly to an officer in the corporation removed from the day-to-day operations of this project. This individual may hold other positions on the project except for Design Project Manager. The QC Manager will be issued a letter signed by an officer of the firm appointing the QC Manager stating that the QC Manager is responsible for implementing and managing the QC program as described in this Manual and the Quality Control Plan. The letter shall state that the QC Manager is responsible for managing the three phases of quality control. The letter will also provide the QC Manager with the authority to stop work that is not in compliance with the established design criteria or the Design Manual. The QC Manager shall issue letters of direction to all sub-consultants QC specialists outlining their duties, authorities, and responsibilities. Copies of the letters shall be included in the QC plan.

1.5.3 Quality Control Plan: The Design Quality Control Plan (QCP) is the A/E's plan for executing the design. The QCP describes the way in which the A/E will produce the deliverables and the steps taken to control the quality. The QCP shall cover every design, engineering product or service whether obtained using in-house forces or subconsultants. The QCP outline, including personnel with resumes, and all details shall be submitted with or prior to the fee proposal. The remaining details of the plan shall be submitted within 10 calendar days of notice to proceed. The nature of the QCP for design or engineering services shall be determined in the pre-proposal meetings. The following items are key components of a design QCP, but should not be interpreted as excluding others. The following outline shall be utilized in presenting the plan.

1.5.3.1 Introduction

A. Quality definition.

B. Goals and objectives.

C. Corporate commitment to the Authority for quality performance.

1.5.3.2 Management Philosophy

A. General description of methodologies to control quality in the design process.

1.5.3.3 Implementation

A. Team Organization, describing positions in organizations having quality responsibilities and any special quality groups (including any subconsultants).

B. Communication Methods, describing information systems, special groups, and meetings to foster/improve communication; provide examples of communication formats and logs and describe methods of communication with subconsultants.

C. List of all design submittals with standards these submittals shall meet.

D. Existing drafting standards and/or engineering procedures to be used by the A/E.

1.5.3.4 Policies

A. Project-specific team policies focusing on coordination of subconsultant responsibilities.

1.5.3.5 Methodology Including Subconsultants

A. Describe how the A/E shall conduct a Preparatory Phase, Initial Phase and Follow-up Phase for each design submittal.

B. Describe methods of monitoring/checking quality.

C. Describe those points in the progress of work when the A/E shall evaluate conformance of the work to requirements.

D. Describe how the A/E shall identify quality problems and resolve deficiencies.

E. Provide a listing of the Project schedule and cost control.

F. Describe project document control; methods to store, retrieve and use documents.

G. Describe how Inter-disciplinary coordination will be accomplished.

H. Describe the handling of Design Review comments.

I. Provide and include sample reports and forms that the A/E will use in implementing the Quality Control Plan.

1.5.3.6 Evidence of Implementation: The Authority will require evidence that the A/E quality control program is being implemented effectively.

1.6 A/E Liability

1.6.1 General: Each A/E design contract and SOW will contain information that details the A/E responsibility to produce acceptable designs and/or Construction Documents within the established and agreed upon construction cost estimate (the Authority budget). By strict enforcement of the design contract, the prime consultant will be held accountable for the quality of the entire design and for design-to-budget. The A/E shall be held accountable for the quality of its and all subconsultant designs, Construction Documents, and design within the budget, by strict enforcement of the contract provisions. The Authority will require that any design deficiencies be corrected by the A/E at no cost to the Authority.

1.7 Design Criteria

1.7.1 General: Section III of this Design Manual and its supporting volumes provide basic design criteria required by the Authority for all designs. The requirements of the Design Manual are to be considered the equivalent of Building Code requirements and are regulations under the laws of the Commonwealth of Virginia. The SOW for each design services contract will provide supplemental design criteria information. All elements of the project must be designed and integrated with the facility, including furniture, fixtures, equipment, outside benches, trash receptacles, express mail check in boxes, counters, baggage check-ins, etc.

1.8 Changes in the Scope of Design Services

1.8.1 Changes to Scope of Work: The A/E activities are restricted to the currently authorized Statement of Work (SOW) as defined in the initial contract and approved contract modifications issued by the Authority. Changes to the authorized scope of work may include, but are not limited to, such items as:

1.8.1.1 Revisions to design schedule.

1.8.1.2 Changes to add or delete work.

1.8.1.3 Major changes in design criteria.

1.8.1.4 Selection of specific systems or equipment without economic or technical evaluation.

1.8.1.5 Introduction of special equipment.

1.8.1.6 Choice of alternate or appropriate materials, methods, or systems.

1.8.1.7 Additional studies and/or field investigations.

1.8.1.8 Submittals in addition to those listed in the Statement of Work.

1.8.2 Responsibility: The A/E responsibility is to report directly to the Authority through the Contracting Officer. Any anticipated deviation from the scope of the A/E services or elaborations within the scope must be brought to the attention of the Contracting Officer for resolution, prior to performing any work that is not consistent with the authorized SOW. When a design change is proposed that affects the A/E scope of work, the A/E shall immediately provide the Authority Project Manager and the Contracting Officer written notification of the proposed change, including:

1.8.2.1 Scope and reason for the proposed change.

1.8.2.2 Design and construction cost impacts.

1.8.2.3 Design and construction schedule impacts.

1.8.2.4 Design cost change proposal.

1.8.3 Change Analysis: The Authority will analyze the proposed change request and will provide the Contracting Officer an analysis of the request, including any differences in fee and/or schedule. Upon receipt of the change analysis, the Contracting Officer will negotiate adjustments with the A/E regarding differences between the A/E estimate for a change in fee and/or schedule and the Authority estimate. The Authority will complete a Record of Negotiation summarizing the final outcome to support the modification to the A/E contract. Prior to initiating any work on the change, the A/E must obtain written approval from the Contracting Officer.

1.9 Progress Reporting

1.9.1 General: A/Es shall report on their progress during design according to the detailed requirements of the SOW. This report cycle will be monthly, unless stated differently in the A/E Contract. A/Es shall provide percentage complete status against the Authority approved work plan provided by the A/E at the beginning of the contract. Concurrence by the Authority in the percentage complete status will be required for the approval of invoices submitted by the A/E. The Authority typically uses Primavera software and prefers that A/E prepared schedules are compatible. Each submittal shall include schedule information in CD format.

1.10 Management of Subconsultants

1.10.1 General: It is the responsibility of the A/E to manage their subconsultants. Although direct communication between the Authority and subconsultants is appropriate when necessary to maximize technical information flow and communication, the A/E remains directly responsible for subconsultant performance and contractual commitments. It is the responsibility of the A/E to assure that the work of all subconsultants, including work of subconsultants directly contracted to the Authority, is fully

coordinated with the work of the A/E and with each other.

1.11 Special Study Projects

1.11.1 General: The Authority frequently employs A/E and specialty consultant firms to undertake special studies. A common study project investigates and develops alternative design and engineering solutions to problems that surface during a conventional project. Such a study may require work not covered in the standard A/E agreement.

1.11.2 Feasibility Studies: Feasibility studies are also commissioned by the Authority. They are conducted for the following purposes:

1.11.2.1 To determine the appropriateness of a particular site or existing structure for the proposed use.

1.11.2.2 To determine the feasibility of modifying an existing facility to increase capacity, change use, or comply with codes, standards, or regulations.

1.11.2.3 To help the Authority establish a realistic cost estimate for repair or renovation work.

1.11.3 Study Information: Study projects must develop and present necessary information, including time frame for completion and reliable cost estimates in adequate details, to allow the Authority to make appropriate decisions on the best course of action.

1.12 Interfacing with Other Work

1.12.1 General: During the performance of its services, the A/E shall thoroughly investigate what other existing conditions and current or future projects have a bearing on any part of work included in the A/E contract. The A/E shall indicate in the Design Report and in the Division 01 General Requirements of the Specifications all preceding, concurrent or subsequent construction affecting the project and how this construction may impact scope and schedule. The A/E shall assure the Authority that all elements of its work and its subconsultants work are fully coordinated with other work.

(This Page Blank)

CHAPTER 2 The Design Phase

This chapter encompasses project activities from the issuance of the A/Es Notice-to-Proceed (NTP) to the completion of the Contract Documents.

2.1 Design Process

2.1.1 General: The description of A/E services during the procurement and construction phases is discussed under their respective chapters. Because the design process of projects performed for the Authority are multi-faceted and complex, the execution of which involves a large number of professionals from various disciplines and backgrounds, it is impossible to provide precise instructions that could be equally applied to different types of projects. However, in order to assure consistency in the execution of the work, the Authority provides the following guidelines for reference that should be utilized, as applicable, to each project. Actual A/E contractual responsibilities are specifically tailored to the unique requirements of each project and are defined in the Statement of Work (SOW) and the Contract Provisions. The Contract Provisions and SOW shall govern and take precedence over the contents of this section. There are specific format requirements for all submittal materials required by the A/E Contract. Refer to **Chapter 7** of this Section.

2.2 Pre-Design Meetings

2.2.1 General: The activities of the Design Phase of each project are initiated by the Pre-Design Meeting. Within two weeks of the date of the NTP, the Authority will hold a Pre-Design Meeting. The purpose of the Pre-Design Meeting is to introduce the participants of the project, to confirm and clarify project and design requirements, administrative procedures, restrictions and limitations, invoicing/pay procedures, security procedures, safety requirements, and to address the concerns of affected parties. The participants of the Pre-Design Meeting, in addition to representatives and consultants of the Authority, the A/E and its subconsultants, normally include impacted airport users, such as representatives of air carriers, tenants, and other concerned parties.

2.3 Design Report

2.3.1 General: A Design Report will be required as a standard deliverable in all A/E contracts and requirements for the Design Report shall be described in detail in the A/E Services Statement of Work. This report will summarize the major design issues, basic design assumptions, building code requirements, and criteria used to accomplish the various project elements. The Design Report shall be updated and submitted with each of the project specified submittals.

2.4 Design Reviews

2.4.1 General: At the conclusion of each required stage of the design, the A/E is required to submit its work to the Authority for review, approval, and comments. Depending on the size and nature of the project, the review of the submittal may be a full review conducted at the facilities of the Authority, or an “On-Board Review” conducted at the facilities of the A/E. An On-Board Review is conducted at the A/E Facility or the Authority without the benefit of having the plans submitted prior to the meeting.

2.4.2 Responsibilities: For Authority projects, it is the responsibility of the Authority Design Project Manager to assure that submittal procedural requirements are met and to conduct the review process. For Tenant Projects, it is the responsibility of each tenant to assure that proper coordination exists between their A/E(s) and the Authority Project Manager, and that all necessary approvals are received prior to the start of construction.

2.4.3 Procedures: The A/E is required to submit the required deliverables to the Authority Project Manager who will distribute the submittals to the professional review staff. After the review staff has reviewed the submittal and compiled review comments, the Project Manager will determine if the submittal meets contract requirements. If it is considered acceptable, the Project Manager will bring

and discuss the review comments in the Design Review Meeting. The A/E will then incorporate the changes, if any, in the next submittal. If the submittal is determined to be unacceptable, the A/E will be notified accordingly.

2.4.4 Process: The A/E should anticipate detailed, and in some cases, extensive review comments on design submittals. The Authority will provide clear, non-contradictory review comments so that the A/E shall be able to modify the design and/or correct existing deficiencies. For each design submittal, the Authority will provide the A/E with a letter response that includes the review comments made. Final A/E action on the review comments will occur after the A/E has had an opportunity to discuss the comments with the Authority. Typically, a Design Review Meeting will be held within two weeks of A/E receipt of Authority review comments to clarify information and resolve design issues raised by the review comments. The meeting will enable inclusion of the appropriate action codes in the Review Conference Action (RCA) column of the Design Review Comment (DRC) form. Later, the A/E shall address the comments in the documents and complete the DRC form accordingly for inclusion in the design report for the next design stage. The completed (annotated) DRC form shall include the action codes in both the RCA and Final Action (FA) columns and as needed, appropriate written response to each comment describing how the comment has been resolved and/or incorporated in the design documents.

2.5 Definition of Design Phases and Submittal Requirements

2.5.1 General: This section describes the stages in which the design process is executed and submitted. The objectives and levels of completion are provided for each submittal. Design submittals are required at the time of A/E completion of the following design stages:

Pre-Design Programming and Schematic Design (15%) Submittal
Design Development (30%) Submittal
Construction Documents (50/60%) Submittal
Construction Documents (90%) Submittal
Construction Documents (100%) Submittal
Construction Documents (Final) Submittal

The required contents of these design submittals are further described in the following paragraphs.

2.5.2 Programming and Schematic Design (15%) Submittal: The objectives of the Pre-Design Programming and Schematic Design are to define the project criteria, formulate the design philosophy, and to develop design solutions, including alternate schemes for the project. During programming the A/E shall provide the Authority data and documentation that will assist in establishing validity of the overall program, schedule, limitations, and other requirements that serve as the basis in the development of the schematic design and identifying issues that may require adjustments to the program. During the schematic design effort, the A/E shall develop a design solution to the program and alternative schemes and associated site development plans. These drawings and/or models shall illustrate the general scope, compatibility with FAA Part 77 guidelines, scale, and relationship of project components for conceptual or schematic approval by the Authority. The Schematic Design Submittal shall include information that is sufficient in detail to define and quantify system requirements and interrelationships, and shall comprise drawings, list of specification sections, cost estimates, and Design Reports for alternative design solutions as required by the SOW.

2.5.2.1 Drawings

A. The Schematic Design Submittal drawings shall define site, utility, and floor layouts; floor and building heights and elevations; structural and mechanical systems; overall electrical, utility, and other system requirements; and provide overall dimensions of major systems and elements. The submittal will normally include the following drawings for each alternative:

Cover Sheet, Drawing Index
Survey of existing conditions

Site Layout, Civil and Utility Plans and requirements
Floor Plans
Architectural Sections and Elevations
Structural Drawings, Soil Analysis if available
Mechanical, Electrical, Plumbing and Fire Protection Drawings
Perspective Sketches and Study Models

B. At the end of the schematics design stage, upon selection of accepted alternatives, the A/E shall provide to the Authority a list of expected construction document drawings.

2.5.2.2 Specifications: The A/E shall prepare a list of proposed MASTERSPEC© specifications formatted and numbered in accordance with the Construction Specifications Institute (CSI) the most current MasterFormat. These specifications will eventually be incorporated into the Construction Documents. Furnish a brief outline description of all major systems selected by each discipline.

2.5.2.3 Cost Estimates: The schematic cost estimate will be used to validate the project budget. For general requirements of estimates refer to **Section II,** in this section. The cost estimates for the Schematic Submittal shall be conceptual in nature, based on systems and unit costs of the work developed. Allowances may be applied to work that is known, but not yet detailed. The estimate submitted at this stage of the work need not be in CSI format. The construction cost contingency at this level should not exceed 20%.

2.5.2.4 Calculations: By the completion of the schematic design the A/E shall size major systems for disciplines, determine total load requirements, and shall furnish all calculations for the establishment of those quantities. For establishing levels of completion for structural, mechanical, plumbing, electrical and fire protection refer to **Paragraph 2.11** and associated tables.

2.5.2.5 Design Report: The Design Report shall address all major design elements and systems, summarize all major design issues, list and confirm project criteria and identify design assumptions, and field findings for all affected disciplines. Provide floor area calculations, spatial and functional relationships, and describe how the design meets or differs from the requirements of the SOW. In the Design Report the A/E shall include a description of all systems for each discipline and specialty contractors/suppliers, including analysis of those and alternative system attributes. The Design Report shall provide information on the preliminary geotechnical report and data. As part of the Design Report the A/E shall explain building code requirements and compliance issues and provide a Building Code Analysis and an Egress Analysis of all structures covered by the USBC. As a minimum, the analyses shall state the type of construction; use group; occupancy load for all parts of the building; live load for each floor; any special stipulations, conditions, and/or modifications to the USBC; and a schematic diagram indicating corridors, exits, and maximum travel distances to the outside of the building. The Code Analysis shall contain the analyses for all disciplines, included but not limited to architectural, structural, plumbing, mechanical, fire protection, and electrical. This information shall be included in the G4 series of drawings, refer to the **CADD Volume**. List all key decisions and information received from the Authority and agencies involved in the project including letters and other documentation.

2.5.2.6 Schedule: As part of this submittal, the A/E shall update the design schedule and provide a broad scope construction schedule defining overall construction times and phasing requirements.

2.5.3 Design Development 30% Submittal: Upon receipt of Authority comments and approval of the schematic design, the A/E shall proceed with the execution of design development work. The objective of design development is to refine the elements defined and information gained during programming and schematic design to define the final details, sizes, connections, material selections, and to resolve inter-disciplinary relationships. By the conclusion of design development, the A/E shall have developed all data required for the preparation of the Contract Documents.

The design development submittal shall include drawings, specifications, calculations, schedules, and the Design Report to the following levels of completeness.

2.5.3.1 Drawings

A. The design development drawings shall be in the final format of the Contract Documents and shall be presented in corresponding scale across all disciplines. Dimensioning shall be sufficient to define sizes of details, material thickness, equipment and fixture sizes, etc. The submittal generally comprises the following drawings:

Cover Sheet, List of Drawings, Legends and General Notes
Site Surveys and Boring Location Plans
Civil, Landscaping, and Utilities Plans, and Details and Schedules
Measured Drawings of Existing Conditions and Demolition Plans
Architectural Plans
Architectural Sections
Typical Wall Sections
Reflected Ceiling Plans
Interior Elevations
Typical Architectural Details
Architectural Schedules
Structural Plans
Structural Sections
Structural Details
Structural Schedules
Mechanical Plans
Mechanical Riser Diagrams
Mechanical Isometrics
Mechanical Details
Mechanical Schedules
Building Management and Automation Systems
Plumbing Plans
Plumbing Riser Diagrams
Plumbing Details
Plumbing Schedules
Electrical Site Plans
Electrical Floor Plans
Electrical Schedules
Electrical Riser Diagrams
Electrical Details
Fire Protection Plans
Fire Protection Riser Diagrams
Fire Protection Details
Fire Protection Schedules
Fire Alarm Plans
Fire Alarm Diagrams
Fire Alarm Details
Fire Alarm Schedules
Public Address System
Baggage Handling Systems
Special Systems:
- Master Clock System
- Security System (ACAM, CCTV)
- Automated External Defibrillator (AED) Cabinet Monitoring System
- Multi-User Flight Information Systems (MUFIDS)
- Common Use Terminal Equipment (*i*MUSE)
- Premise Distribution System
- Information Network Infrastructure Design
- Telecommunication Room Design
- UPS Requirements to Support Special Systems
- Blue Light Emergency Telephones (BL-ETELs)
- Fire Fighter Emergency Telephones (FFETs)
- 800 MHz Emergency Radio Supplemental Radiation System (SRS)
- CATV

Furniture, Fixture and Equipment Layout and Design
Color Selections
Other systems as required

B. If applicable, the design development submittal should also include drawings, specifications, and calculations of specialty subconsultant's work, such as interior designer, acoustical and lighting consultants, etc. The A/E shall furnish a revised and detailed list of drawings required for the Construction Documents. For other drawing requirements please refer to **Paragraph 2.7**.

2.5.3.2 Specifications: The Design Development 30% Submittal shall include an Outline Specification of all applicable sections, and shall be developed using the most recent edition of MASTERSPEC©, using the standard Authority page format. A sample of this format is located in **Section II, Chapter 7** of this Design Manual. The outline specifications shall indicate at a minimum, unique Part 1 General requirements including coordination with other specifications sections, listing of products and general description of specialized execution sequences and quality control procedures. The Authority will advise A/E on particular quality assurance and control issues that the A/E shall address. A listing of the CSI specifications sections may result in rejection of the Specification submittal.

2.5.3.3 Cost Estimate: The Cost Estimate at the Design Development 30% submittal will be used to verify compliance with the Authorized Construction Budget. For general requirements of estimates refer to **Paragraph 2.12**. The cost estimate for the design development submittal shall include actual quantities and the unit costs for the major portions of the work developed. Approximate quantities and unit costs shall be developed for work not clearly defined. Allowances may be applied for work that is known, but not yet detailed. The construction cost contingency at this level should not exceed 15%. A section of the estimate shall include a budget reconciliation detailing major variances between the total amount of the current construction estimate and that of the schematic submittal.

2.5.3.4 Calculations: The calculations shall be sufficiently detailed to quantify individual elements of the systems defined during design development. Calculations shall be given for determination of sizes, grade/quality of materials, sizing and location of details and equipment. (Such as, wall/floor thickness, column/beam/connection sizes, equipment sizes, spatial requirements, etc.). For establishing levels of completion for structural, mechanical, plumbing, electrical and fire protection refer to **Paragraph 2.11** and associated tables.

2.5.3.5 Design Report: The Design Report shall be updated to address how the information gained from the schematic design review and comments has been carefully coordinated, cross-referenced and incorporated into the design development documents; how the design development documents address further developments in design characteristics; code compliance issues; and description of how the design meets or differs from the requirements of the SOW. The Design Report shall discuss the characteristics of selected materials, equipment and fixtures, and considered alternates. The Design Report also should identify issues that may have a long-term effect on the execution of the work, such as long-lead delivery items and other critical activities. If applicable, the design report shall also include the completed DRC form from the prior submittal.

2.5.3.6 Schedule: In addition to an updated design schedule, the A/E shall finalize the construction document production schedule and also formulate and outline the anticipated construction schedule, including phasing of the work.

2.5.4 50% Submittal: When the scope of work is well defined, such as in the case of civil structures, renovation work, or other simple structures, the Authority may omit the requirement for the Design Development Submittal and combine the requirements of the 30% and the 60% Submittals, in the form of a 50% Submittal. For the 50% Submittal the requirements of the 60% Submittal shall apply, with a lesser degree of detailing deemed acceptable, due to the simplified nature of the project.

2.5.5 Construction Documents 60% Submittal: Upon receipt of Authority comments and approval of the Design Development Submittal, the A/E shall commence with preparation of the Construction Documents. The objective of the Construction Document phase is to refine and further develop the information attained during design development that provides detailed information for the execution of the work. The Construction Documents comprise drawings, specifications, and contractual information that define in detail all materials, quantities, systems, interrelationships,

work methods and limitations, and contractual requirements for the execution of the project. The Construction Documents must be completely coordinated with the Solicitation Provisions, Special Provisions, and Contract Provisions of the Authority. The Construction Documents will usually be submitted for review and approval in stages at 60%, 90%, and 100% of completion. The requirements for these submittals and their levels of completion are described below. The 60% Submittal shall represent the continuation of the 30% Submittal, incorporating 30% review comments, and shall be in the final format of the Construction Documents. The 60% Submittal, as a minimum, shall comprise the following documents.

2.5.5.1 Drawings: The drawings shall include all required sheets of the final construction working drawings defined by the drawing list, each at least to the 60% level of completion, with sufficient information included for the preparation of a detailed cost estimate. For other drawing requirements please refer to **Paragraph 2.7**.

2.5.5.2 Specifications: The specifications shall be in the most recent edition of MASTERSPEC© and shall be formatted using the Construction Specifications Institute (CSI) MasterFormat 2004. Specifications shall address all applicable subdivisions, and shall contain adequate technical information to supplement the drawings to quantify sizes, capacities, and qualify grade, strength, workmanship finishes, and other characteristics of applicable materials and equipment. Provide a list of Sole-Source items included in the design document and provide Sole-Source Justifications for all items not on the pre-approved list. Refer to **Section I, Paragraph 2.13.1**. Contract Specification requirements are further detailed in **Section II, Paragraph 2.10**. Use the standard Authority page format. A sample of this format is located in **Chapter 7** of this section.

2.5.5.3 Cost Estimate: The Construction Documents at the (60% Review) Submittal estimate will be used to verify the compliance with the Authorized Construction Budget. For general requirements of estimates please refer to **Paragraph 2.12**. The cost estimate for the Construction Documents at the 60% submittal shall include accurate quantities and material and labor unit costs for the major portions of the work developed to date. A limited number of items may require approximate quantities and the unit costs or allowances. The construction cost contingency at this level should not exceed 10%. A section of the estimate shall include a budget reconciliation detailing major variances between the total amount of the current construction estimate and that of the design development submittal.

2.5.5.4 Calculations: The A/E shall furnish calculations for all disciplines, components and systems that are required to determine the final configuration of all parts of the projects leading to satisfactory execution and completion of construction work. For establishing levels of completion for structural, mechanical, plumbing, electrical, and fire protection refer to **Paragraph 2.11** and associated tables.

2.5.5.5 Design Report: The Design Report shall address how the information gained from the design development review has been carefully coordinated, cross-referenced, and incorporated into the Construction Documents, how the Construction Documents address further developments in design characteristics, code compliance issues, and description of how the design meets or differs from the requirements of the SOW. The Design Report shall be in its final format and shall include, as a minimum, the following data:

Executive Summary
Existing Site Conditions
Utilities
Contractor Access and Facilities
Potential Coordination Conflicts/Phasing Issues
Overall Design Philosophy and Criteria by Disciplines
Floor Area Calculation and Allocations
Material Descriptions and Properties
Equipment Description and Properties
Coordination of Maintenance and Operational Issues
Code Report and Compliance Issues
Complete DRC form for the prior submittal

2.5.5.6 Schedule: The A/E shall furnish a revised design schedule and updated probable construction schedule, including consideration of all major systems and long-lead items. The probable construction schedule shall contain a level of detail necessary to identify individual portions of the work. An electronic medium of a compressed back up shall be provided on CD with each submittal.

2.5.5.7 Spare Parts and Long Lead Items List: During the 60% Submittal phase, the A/E shall evaluate the requirements for spare parts and long lead items by identifying the spare parts and their quantities. The A/E is required to coordinate the spare parts requirements with Engineering & Maintenance at each respective airport and to prepare specifications to accomplish these goals. Provide a list of all items that may be required to be purchased in advance by the Authority or the contractor to meet the construction schedule.

2.5.6 Construction Documents 90% Submittal: The 90% Submittal shall incorporate the comments and information gained from the 60% Submittal and is a comprehensive and complete pre-final construction contract document, suitable for public procurement and construction. The documents shall essentially be 100% complete, pending any work for only minor corrections to resolve discrepancies discovered during the final review and for the incorporation of final Authority comments.

2.5.6.1 Drawings: The drawing set shall include all required construction working-drawing sheets completed to practically 100% level of completion. For additional drawing requirements, please refer to **Paragraph 2.7**.

2.5.6.2 Specifications: Specifications shall be complete, comprehensive, and fully coordinated for disciplinary requirements with the working drawings, and with the Contract and Special Provisions. The A/E shall coordinate with Procurement and Contracts to ensure the Contract and Special Provisions are projects specific. The specifications shall include the following contract requirements:

A. Supplemental Conditions

B. Division 01: General Requirements

C. Division 02 through Division 33: All other Technical Specification Sections

2.5.6.3 Cost Estimate: The Cost Estimate at the 90% Submittal will be used to verify the compliance with the Authorized Construction Budget. For general requirements of cost estimates refer to **Paragraph 2.12**. The Construction Cost Estimate accompanying the 90% Submittal shall consist of a detailed line item estimate that shall include accurate unit costs and final quantities. No contingency and minimal allowances should be required. This estimate shall be of sufficient detail to adequately analyze the Contractor's Proposal Documents prior to contract award. A section of the Cost Estimate shall include a budget reconciliation detailing major variances between the total amount of the final proposal document estimate and that of the last estimate submittal.

2.5.6.4 Calculations: All calculations shall be finalized; incorporating all resolved comments and corrections of the 60% Submittal. For establishing levels of completion for structural, mechanical, plumbing, electrical and fire protection refer to this **2.11** and associated tables in this section.

2.5.6.5 Design Report: The Design Report shall be finalized by carefully coordinating, cross-referencing and incorporating all resolved comments and corrections of the 60% Submittal and the contents of all previously submitted Design Reports and revised to reflect the final design. The Design Report shall also include the completed DRC form from the prior submittal.

2.5.6.6 Schedule: The A/E shall furnish a finalized probable construction schedule for the overall times of procurement, fabrication, delivery, and installation of various systems of the projects, including consideration for phasing the construction work. The finalized probable construction schedule shall contain a level of detail consistent with the requirements of the Construction Specification Section 01 32 00 as edited by the A/E and

included in the Construction Documents. An electronic medium of a compressed back up shall be provided on CD with each submittal. As part of the 90% Submittal the A/E shall include a draft of the schedule of construction submittals that lists all items, by specification section, that the construction contractor will have to submit for review and approval during the execution of the work. The A/E shall also provide a record "as executed" design schedule, indicating all significant changes from the original design schedule agreed upon at the NTP.

2.5.6.7 Spare Parts and Long Lead Items List: At the 90% Submittal phase, the A/E shall have finalized the requirements for spare parts and long lead items.

2.5.6.8 Utility Consumption Impact: As part of the design documents being submitted for the Authority's review, the A/E shall provide a statement or estimated figures to reflect the utilities consumption impact as result of facility under design. The figures shall be expressed in "kilowatt-hours" for electrical, "MCF (Million cubic feet)" for natural gas, "1000 gallons" for water and sanitary sewer consumptions, and BTU for the heating and cooling requirement (only if supplied from the central high temperature hot water and chilled water supplies).

2.5.7 Construction Documents 100% Submittal

2.5.7.1 Final Submittal: The final submittal of the 100% Construction Contract Documents shall incorporate all Authority comments developed by the 90% review, with all outstanding actions resolved. All final contract drawings shall be sealed (Commonwealth of Virginia) and signed for final submittal by a Registered Professional Engineer, a Registered Architect, or a Registered Land Surveyor, as appropriate. Work that is performed by professionals or trades that do not require a professional registration in the Commonwealth of Virginia may be exempt from this requirement subject to written approval of the Authority. Deliverables shall include the following documents:

A. Completed DRC form from the prior submittal.

B. An original letter signed and sealed by the A/E of Record and addressed to the Design Department certifying that the design as submitted is in accordance with prevailing and applicable codes. Letter shall include a list of such codes used in the design.

C. Spare Parts and Long Lead Items List: At the 100% Submittal phase, the A/E of record shall have finalized the requirements for spare parts and long lead items.

D. An original letter signed and sealed by the A/E and addressed to the Design Department providing a list of the "Special Inspections" required by the USBC for the proposed work, refer to **Section II, Paragraph 4.2.2** of the Design Manual.

E. An original letter signed and sealed by the A/E of record and addressed to the Design Department for the temporary Support of Excavation System (SOE) when applicable.

F. A complete list of all drawings submitted for final code review.

G. The final cost estimate.

H. The final construction submittal schedule, listing all submittals required of the Contractor by specification section.

I. The construction schedule, including phasing considerations.

J. Utility Consumption Impact. The A/E shall provide a final statement or estimated figures to reflect the utilities consumption impact as result of facility under design. The figures shall be expressed in "kilowatt-hours" for electrical, "MCF (Million cubic feet)" for natural gas, "1000 gallons" for water and sanitary sewer consumptions, and BTU for the heating and cooling requirement (only if supplied from the central high temperature hot water and chilled water supplies).

2.5.7.2 Final Construction Documents: The Final Construction Documents shall be comprehensive, clear and suitable for the purposes of procurement, contracting and construction, and shall incorporate the final, Authority-approved Solicitation Provisions, Contract Provisions, Special Provisions, Conditions of the Contract and General Requirements.

2.5.7.3 Certification Requirements: Final Construction Documents, including drawings, specifications, and calculations shall be sealed and signed by the appropriate Virginia Professional Registered Architect or Engineer-of-Record. Plans and specifications prepared for asbestos abatement, hazardous materials remediation, wetland delineation or other environmental activities shall be signed and sealed in accordance with Federal and State regulations.

2.6 Design Reviews for Tenant Projects

2.6.1 Tenant Reviews: Depending upon the size, nature, and complexity of a project, the design phasing and submittal requirements may vary. As a minimum, a schematic submittal and a 90% Construction Document Submittal will be required. The requirement for added submittal(s) will be determined by the Authority. The schematic submittal should include preliminary, scaled floor plans of the affected space and adjacent impacted areas, elevations of project area, statement of potential for possible hazardous materials, and preliminary load calculations for electrical and mechanical services. The 100% Submittal should be a complete, constructible set of plans and specifications, including a proposed schedule of construction activities. Tenant 90% and 100% Construction Document Submittals shall include electronic files, which shall conform to the CADD standards set forth in **Section II, Paragraph 2.8, and** Design Manual**, CADD Volume.**

2.7 Drawing Requirements

2.7.1 Scale: The minimum scale for all floor plans shall be ⅛" = 1' – 0". Minimum lettering height shall be ⅛".

2.7.2 List of Effective Drawings: The A/E shall submit a revised index of drawings with each submittal. The index will reflect the revision version of each drawing that is current. This is required during both the design phase and the construction phase, for each construction contract modification.

2.7.3 Drawing Materials: An original of all final drawings shall be submitted on 3 mil Mylar film reproducible media with all imagery in black.

2.7.4 Drawing Sizes: The size of the sheets and the scales used are dependent upon the nature of the project but are subject to the written approval of the Authority. Drawings within a project set shall be of one standard size. Drawings shall normally be 22" x 34", with the exception that drawings for buildings may be 30" x 42".

2.7.5 Characteristics of Drawings: All work shall be neat and legible, and line work shall be in ink, plastic lead, or an acceptable substitute approved by the Authority in writing.

2.7.5.1 Graphics Standards: Drawing work, except as noted below, shall use symbols and designations found in the CADD Design Standards Volume of the Design Manual. Specialty symbols used on electrical drawings shall be as approved in writing by the Authority.

2.7.5.2 Graphics Scale: All drawings shall contain appropriate graphic scale indications for each scale utilized.

2.7.5.3 References: For all sections and detail plans, provide referencing in the forward and backward direction. The section and detail symbols shall provide a circle with the lower half divided into two parts. The left portion shall indicate the sheet number where the section/detail is taken. The right portion shall indicate the sheet number where the section/detail is drawn.

2.7.6 Cover Sheet/Typical Plan Formats

2.7.6.1 Cover and Title Sheet Format: The A/E shall be provided with a Cover Sheet Format and a Title Block

Sheet Format during pre-design. The pre-printed initials of the appropriate Authority officials are required on each drawing; and for the Final Construction Documents, the signatures of the Authority officials are required on the title sheet. The Authority Project Manager will acquire the Authority signatures on the A/E's final Cover Sheet.

2.7.6.2 Level of Completion Cover Sheet: The Cover Sheet of each set of documents shall indicate the level of completion (15%, 30%, 50% or 60%, 90%, or 100%) and the date of the submittal.

2.7.7 File Naming and Numbering Convention: Refer to CADD Volume, **Naming Conventions – Model Files and Level/Layer Tables** for further details.

2.7.7.1 Drawing Identification Numbers: Each drawing will be assigned a specific drawing number during the Schematic Design and Design Development Phase, which shall include a project identification to be furnished by the Authority.

2.7.7.2 Sheet Identification Numbers: In addition, the A/E shall provide Sheet Numbers for all drawings. Sheet Numbers shall be provided by discipline/subject. The type of project will dictate the exact system to be used, since a specific drawing series, numbering and/or title may be required for special elements and structures, such as fire protection systems, fueling systems, security systems, bridges and tunnels including underground structures (people mover components). A typical index of drawing series using a discipline/subject numbering system can be found in the CADD Volume.

2.7.7.3 100% Design Drawing Identification Numbers: The 100% design drawings shall be numbered as to the total number of sheets in compliance with the **CADD Volume**. For example, if the 100% design drawings contain 300 sheets, the sheets shall be numbered as 1 of 300, 2 of 300, and 300 of 300.

2.7.8 Indexing Requirements for Design Documents: When a set of project drawings is to be bound in more than one volume, each volume in the set shall have the entire index of the project drawings. Each volume shall also be clearly numbered on its cover. This requirement also applies to multi-volume project specifications, calculations and reports. Page numbers are not strictly required in the calculations index, but the titles of the items or equipment/systems for which calculations are provided must be listed.

2.7.9 Required Number of Sets: The A/E SOW will specify the required size, type, and number of sets of each submittal. Generally, half-size sets of drawings will be required for the 50% or 60%, 90%, and 100% Submittals. Additional change or correction drawings, as needed, may be issued on other appropriately sized standard sheets.

2.7.10 Arrangement of Drawings: The drawings shall be arranged in the sequence indicated in the CADD Volume.

2.7.11 Airports Authority Assigned Building, Room, Elevator and Stair Numbers Required: All drawings shall contain the Airports Authority assigned building number and Airports Authority assigned room numbers for every rom or space. Elevators shall be identified by the Airports Authority assigned elevator number. Stairwells shall be identified by the Airports Authority assigned stair number.

2.8 Computer-Aided Design and Drafting (CADD) Requirements

2.8.1 Project Submittals: All project submittals shall be provided in both electronic and hard copy format. The A/E SOW will indicate which phases will require electronic media submittals. CADD Standards defines the requirements for all CADD documents delivered to the Authority. The Authority permits submittals in either of two formats. For each format, the files must be "native" formats, fully functional, editable, and completely useable within the respective software of creation noted above. It is not acceptable to create drawings on any other software other than noted above and files may not be translated from any other software into these formats. Formats are:

2.8.1.1 Bentley MicroStation: Version v8 or higher preferred; mandatory for civil sitework design.

2.8.1.2 Autodesk AutoCAD: Version 2004 or higher acceptable for Structural and Building design for all disciplines.

2.8.2 CADD Drawings: All CADD generated drawings shall be part of each submittal. If drawings are not CADD generated these drawings shall be converted to a digital format at the final submittal.

2.8.3 Photogrammetric Mapping: All photogrammetric mapping shall be consistent with the Airport Layout, Photogrammetry and Navigational Aid Screening Standards, prepared by the Florida Department of Transportation Aviation Office and the FAA Southern Region, draft dated April 1, 1996. See **CADD Volume, Chapter 8 – Aerial Photography** for Level/Layer Assignments.

2.8.3.1 Electronic files containing photogrammetric mapping for either airport shall be consistent with the respective airport coordinate systems in effect; such files shall be compatible with the CADD standards set forth.

2.8.4 GIS Formatted Drawings: The A/E shall coordinate with the Authority to ensure that all work and submittals are completed in compliance with the Authority's most current GIS standards.

2.8.4.1 GIS Submittal: All CADD generated drawing files shall be useable for GIS purposes and in ESRI's version 8.3 formats.

2.8.5 GIS Data Standard Document: A document outlining GIS data model or structure will be created based on the Spatial Data Standards for Facilities, Infrastructure, and the Environment (SDSFIE) version 2.40 or later, distributed by the U.S. CADD Technology Center, which is available on the web at http://tsc/wes/army.mil. For those features not included within the SDSFIE standard, the A/E shall use their professional experience as well as other existing industry standards to complete the data model.

2.8.5.1 The data model setup must be submitted to the Authority for review before the records and fields are populated.

2.8.6 Metadata: A metadata document will be created for each unique data layer or theme. These metadata documents will be based on the Federal Geographic Data Committee (FGDC) standard as provided for in ESRI's ARCGIS metadata tool set.

2.9 2.9 Finish Materials and Color Boards

2.9.1 General: Finish materials and color boards shall be required for all architectural projects. These boards should be submitted in draft form at the 60% level and in final form with the 90% documents for review and approval. As a minimum, each finish scheme should be presented in its entirety showing floor, base, wall, door, trim and ceiling materials and color selections with each item identified by current manufacturer's number and other information that may be available. The number and complexity of the boards will correspond to the complexity of the project. For example, a new terminal could require elevations, perspectives, and/or blown-up detail isometrics to fully explain the scheme and how it would look in the finished project. Each sample should be mounted on individual 8½" x 11" boards. Label the back of each board to clearly indicate the Airport, airport project, project area, date, and material data, and place all the boards in a three-ring binder.

2.10 Contract Specification Requirements

2.10.1 General: Develop the Contract Specifications using the most recent edition of MASTERSPEC©. Use the section titles and numbering system of the MASTERSPEC© specifications, unless otherwise directed in writing by the Authority. Civil and utilities work within the Air Operations Area (AOA) shall utilize FAA Advisory Circulars, orders, standards, and specifications for

guidance in the development of specifications. Landside pavements, roadways, and bridges shall utilize Virginia Department of Transportation (VDOT) specifications and standards for guidance in the development of specifications. At an early stage of the design process, the Authority will provide the A/E with a copy of the Solicitation Provisions, Contract Provisions, Special Provisions, and specially tailored Procurement and Contracting Requirements, (Division 00), and General Requirements (Division 01) and certain technical specifications sections. The A/E shall select and edit all specification sections for specific project requirements. The A/E shall coordinate Solicitation Provisions, Contract Provisions, and Special Provisions ("boilerplate"); Contracting Requirements, Supplementary Conditions, and General Requirements; and the technical specifications to ensure clear and compatible Contract Documents. Additionally, develop for and propose to the Authority any additional required contract language for the Contracting Requirements and General Requirements divisions of the contract. As the Division 01 Specifications and Section 00 73 00 "Supplementary Conditions" change from time to time, 30 calendar days prior to the 60% Submission the A/E shall contact the Authority's Project Manager to obtain the most current version of the Division 00 and 01.

2.10.2 Authority Customized Specification Sections: The following Authority customized Specification Sections are available, each of which must be edited for project specific requirements:

DIVISION 00 – PROCUREMENT AND CONTRACTING REQUIREMENTS

Section 00 73 00: Supplementary Conditions
**Section 00 73 19: Project Safety and Health Specifications

DIVISION 01 – GENERAL REQUIREMENTS
Section 01 10 00: Summary
Section 01 21 00: Allowances
Section 01 22 00: Unit Prices
Section 01 22 10: Measurement and Payment
Section 01 23 00: Alternates
Section 01 29 00: Applications for Payment
Section 01 31 00: Project Management and Coordination
*Section 01 32 00A: Construction Progress Documentation
*Section 01 32 00B: Construction Progress Documentation
*Section 01 32 00C: Construction Progress Documentation
Section 01 32 33: Photographic Documentation
Section 01 33 00: Submittals
Section 01 40 00: Quality Requirements
Section 01 42 00: References
Section 01 50 00: Temporary Facilities and Controls
Section 01 60 00: Product Requirements
Section 01 73 00: Execution
Section 01 73 29: Cutting and Patching
Section 01 77 00: Project Closeout
Section 01 78 23: Operation and Maintenance Data
Section 01 78 39: Project Record Documents
Section 01 79 00: Demonstration and Training

DIVISION 02 – 33 TECHNICAL SPECIFICATIONS

Section 02 41 19: Selective Structure Demolition
Section 26 05 13: Medium - Voltage Cables
Section 26 05 53: Identification for Electrical Systems
Section 31 25 14: Storm Water Pollution Prevention Plan
Section 32 72 00: Wetlands Restoration
Section 32 73 00: Wetlands Permit Requirements
Section 32 92 00: Turf and Grasses
Section 33 11 16: Site Water Utility Distribution Piping
Section 33 31 17: Site Sanitary Utility Sewerage Piping

DIVISION 19 VIRGINIA DEPARTMENT OF TRANSPORTATION SPECIFICATIONS

DIVISION 20 FAA SPECIFICATIONS

P-304: Cement-Treated Base Course
P-401: Asphalt Concrete Pavement
P-405: Asphalt Concrete Pavement
P-501: Portland Cement Concrete Pavement

*Contact Authority Project Manager at beginning of contract for direction on which version of Section the A/E is to use in each project.

2.10.3 Applicability of Standards: The A/E shall verify the applicability of standards that are referenced in the Contract Specifications. The A/E shall provide the Authority Project Manager with a summary list of all standards referenced and shall include detailed reference information in Specification Section 01 42 00. The A/E shall submit a revised Table of Contents for specifications with each submittal. The list will reflect the revised version of each specification section that is current. This is required during both the design phase and the construction phase for each construction contract modification. The Authority has adopted a standard specification, Section 01 40 00, which outlines the organizational, operational and administrative requirements of the Contractor Quality Control Program. The A/E shall provide detailed requirements for testing and inspection for each item of work during all phases of construction, from submittals, through procurement, fabrication, installation, start-up, testing and balancing, and final acceptance in all other technical Specifications Sections. These testing and inspection requirements shall be identified, specified, and detailed in a PART 4 - CQC REQUIREMENTS in each technical Specification Section. Additional requirements include the following:

2.10.3.1 Contract Specifications: A complete, comprehensive, customized set of Contract Specifications is required for each contract.

2.10.3.2 Local Construction Materials: When practical and appropriate, the A/E shall investigate and specify the use of locally available construction materials, techniques, and building equipment.

2.10.3.3 Material Criteria: Contract Specifications shall establish the basis of product and material criteria, applicability of codes and industry standards, references to technical publications, and all industry standards applicable.

2.10.3.4 Calculation Method: Contract Specifications shall set forth the significance of calculation methods; technical data for computer programs used; and requirements for maintenance, service life, constructability, operations, and long-term durability.

2.10.3.5 Manuals: Contract Specifications shall list and establish the basis of all manuals which need to be produced for the project and identify who will provide the manual, including project record drawings, the project record specifications, the project record calculations, materials and finishes manual, equipment and systems manual, and operations and maintenance manuals.

2.10.3.6 Paper: Contract Specifications shall be produced on 8½ x 11 inch bond paper, with covers of card stock 110 lb. weight minimum.

2.10.3.7 Covers: Covers shall be properly titled, with project name and number, and color-coded by phase; required cover color-coding is as follows:

15%	Pastel Green
30%	Red
60%	Blue
90%	Yellow
100%	Gray
Final	White

2.10.3.8 Each Page: Each page of the Contract Specifications shall include the project title, the Authority-assigned project number, the Specification Section number, the page number, and the date, a sample of which shall be provided by the Authority.

2.10.3.9 Delivery: The A/E shall deliver the Contract Specifications in the form of one unbound original with copies as specified by the A/E SOW, and one electronic copy on CD-ROM, using the software file format of Microsoft Word Version 2000 or higher for Windows.

2.10.3.10 Design Elements: When standard design elements, developed by agencies or organizations (VDOT,

FAA, etc.) independent of the Authority, are incorporated into the project design, all necessary information and details regarding these standard elements must be included in the project contract documents in the required format, and may not be included by reference only.

2.10.3.11 Standards and Codes: The A/E shall have in their possession all standards and codes referenced in their Contract Documents. The A/E shall be familiar with all standards and codes referenced in the various sections of the Contract Specifications.

2.11 Calculations

2.11.1 Preparation of Calculations: It is essential that design calculations be kept up to date and assembled in an orderly manner as the design progresses. Well-organized, annotated, edited, indexed, and cross-referenced calculations reflect good engineering practice. To produce calculations of this quality, the A/E shall cite authoritative reference documents upon which the analysis is based. Careful documentation shall demonstrate the accuracy of the calculations. All calculations shall be signed, sealed, and dated by an architect or engineer registered in the Commonwealth of Virginia. Each calculation sheet shall be traceable to the originator, date and project title. Computer inputs shall be clearly identifiable, including date and project title. Structural calculations for construction permitting shall be submitted in accordance with the laws of the Commonwealth of Virginia.

2.11.2 Checking/Verification: All calculations shall be checked by the A/E for completeness of material, compliance to criteria, validity of assumptions, accuracy of mathematical and numerical content, compliance with code, quality of engineering judgment, clarity of presentation, format, and adequacy of referencing to engineering publications and related documents. Each calculation sheet shall be initialed and dated by the engineer(s) assigned as Design Checker(s) for that portion of the work. Final calculations shall be indexed, sealed and signed by the A/E whose name appears on the Design Calculations index. To assure the preparation of neat, logical and complete calculations, and also to accomplish review and checking within a reasonable time and with minimum effort, the following guidelines shall be observed:

2.11.2.1 Criteria: Establish the criteria for the design and record it at the beginning of calculations for each discipline, including all codes and standards, values and data including design live loads, foundation and soils parameters, design materials with properties and stresses, assumptions, and exceptions, including the source of this information, used as the basis for the calculations.

2.11.2.2 Assumptions: Assumptions and design criteria shall be clearly stated prior to the presentation of the calculations.

2.11.2.3 Individual Calculations: Individual calculations to verify sizes, bolts, welds, etc., shall be provided with all details.

2.11.2.4 Sketches: Sketches used to describe the basis of calculations shall be drawn neatly and to approximate proportions.

2.11.2.5 Referenced Sources: Provide referenced sources.

2.11.2.6 Notes: Include all notes necessary to clarify the analysis and assumptions.

2.11.2.7 Pages: Do not crowd pages. Number all pages.

2.11.2.8 Measurements: Show all units of measurement abbreviations. Omissions of these abbreviations can lead to misunderstanding and errors.

2.11.2.9 Numbers: Show all numbers in all intermediate steps needed so that the end result can be checked.

2.11.2.10 Table of Content and Index: Provide table of contents and index with appropriate page numbers.

Table 2 - 2

Structural Calculations Level of Completion

Calculations	Pre-Design Programming and Schematic Design 15% Submittal	Design Development 30% Submittal	Construction Documents 60% Submittal	Construction Documents 90% Submittal	Construction Documents [1] 100% Submittal
Design Narrative	Brief description of Alternative Building Systems and Recommendation	Updated description of proposed system	Detailed description*	Complete detailed description*	Final*
Codes and Standards	Proposed list	Updated list	Updated list*	Complete list*	Final*
Design Loads	Primary gravity and lateral loads	Updated primary loads	Updated primary and secondary loads*	Complete list of all loads*	Final*
Materials	List of Primary materials	Updated list of primary materials and Stresses	Updated list of all materials and Stresses*	Complete list of all materials and Stresses*	Final*
Design Approach and Methodology	Optional	Required	Updated design approach*	Finalized design approach*	Final*
Design Primary Framing members	Optional	Design of typical members	Updated design analysis*	Complete design analysis*	Final*
Design Lateral Load Resisting System	Optional	Preliminary analysis	Updated design analysis*	Complete design analysis*	Final*
Design all other Members	None required	Optional	In-Progress Design Required*	Complete design analysis*	Final*
Framing Plans and Sections	Non required	Preliminary Plans with Member Marks	In-progress Plans with Member Marks	Final plans and Member Marks*	Final*
Details	None required	Optional	Typical and Major Details	All details*	Final *
Applicable Catalog Cuts	None required	None required	Required	Complete	Final

* Checked Calculations

Note 1. 100% Submittal (Final design/Record copy) shall demonstrate code compliance.

Table 2 - 3 Mechanical Calculations Level of Completion					
Calculations	**Pre-Design Programming and Schematic Design 15% Submittal**	**Design Development 30% Submittal**	**Construction Documents 60% Submittal**	**Construction Documents 90% Submittal**	**Construction Documents 100% Submittal**
Design Narrative	Preliminary systems descriptions and outline of design intent.	Updated systems description and outline of design intent.	Updated systems description and narrative of design intent including controls.	Final systems description and narrative of design intent including controls.	Record version of systems description and narrative of design intent including controls.
HVAC Loads	Order of Magnitude estimate of block loads based on square footage factors including assumptions.	Detailed HVAC load analysis, including design conditions and assumptions.	Updated detailed HVAC load analysis, including design conditions and assumptions.	Final detailed HVAC load analysis, including design conditions and assumptions.	Record copy of final detailed load analysis.
Equipment Selection	None required.	None required.	Calculations for equipment selection and catalog cuts, fan curves, pump curves, etc.	Final calculations for equipment selection and catalog cuts, fan curves, pump, etc.	Record copy of final equipment selection and catalog cuts.
Pipe and Duct Sizing	None required.	None required.	Calculations to determine sizing of all piping and air distribution systems.	Final calculations for sizing of all piping and air distribution systems.	Record copy of final sizing of all piping and air distribution systems.
Piping System Support and Thermal Expansion.	None required.	None required.	Detailed analysis for the selection of support systems and stress relief calculations (including expansion loops/joints, guides and anchors).	Final analysis for the selection of support systems and stress relief calculations (including expansion loops/joints, guides and anchors).	Record copy of final analysis for the selection of support systems and stress relief calculations (including expansion loops/joints, guides and anchors).
Code Compliance with International Energy Conservation Code	None required.	None required.	Detailed analysis demonstrating compliance.	Final analysis demonstrating code compliance.	Record copy of final analysis.

Table 2 – 4 (Part a) Plumbing Calculations Level of Completion					
Calculations	**Pre-Design Programming and Schematic Design 15% Submittal**	**Design Development 30% Submittal**	**Construction Documents 60% Submittal**	**Construction Documents 90% Submittal**	**Construction Documents 100% Submittal**
Design Narrative	Preliminary Systems description and outline of Design Intent.	Updated systems description and outline of Design Intent.	Final systems description and narrative of Design Intent.	Final systems description and narrative of Design Intent with 60% comments incorporated.	Record version of systems description and narrative of Design Intent.
Building Domestic Water Demand and Available Pressure	None required.	Detailed analysis for estimating the supply demand of the building main and the principal branches based on tabulation of supply fixture units of all connected fixtures, including demand for continuous flow, existing and future loads. Indicate pressure available for domestic water system based on hydrant flow test data.	Final Analysis as described in 30%.	Final Analysis with 60% comments incorporated.	Record copy of the final analysis.
Sizing of Waste, and Vent Piping Systems	None required.	Detailed sizing of drainage systems based on Drainage Fixture Units, values for continuous flow, values for semi-continuous flow, and values for indirect waste. Submit riser diagrams with DFU marked on each segment. Drainage system sizing shall be based on the estimated flow including existing and future loads. Include major equipment selection.	Final Analysis as described in 30%.	Final Sizing Analysis with 60% comments incorporated.	Record copy of the final sizing analysis.

Table 2 – 4 (Part b) Plumbing Calculations Level of Completion					
Calculations	**Pre-Design Programming and Schematic Design 15% Submittal**	**Design Development 30% Submittal**	**Construction Documents 60% Submittal**	**Construction Documents 90% Submittal**	**Construction Documents 100% Submittal**
Sizing of Building Storm Drainage System	None required.	Detailed sizing analysis for primary and secondary systems based on projected roof area (sq. ft.) drained by each storm leaders. Include riser diagrams.	Final Analysis as described in 30%.	Final Analysis with 60% comments incorporated.	Record copy of the final sizing and analysis.
Fixtures, Trim, and Equipment	None required.	None required.	Catalog cuts for fixtures, trim, plumbing specialties and equipment.	Final catalog cuts for fixtures, trim, plumbing specialties, and equipment.	Record copy of catalog cuts for fixtures, trim, plumbing specialties, and equipment.
Domestic Hot Water Heating and Storage Requirements	None required.	Detailed analysis of hot water demand including hot water equipment selection.	Final Analysis as described in 30%.	Final Analysis with 60% comments incorporated.	Record copy of the final analysis.
Domestic Water Sizing	None required.	Detailed water pipe sizing procedure based on available pressure and friction loss calculation including pressure at the highest fixture in the supply system. The estimated supply demand shall be based on supply fixture units value and continuous flow including existing and future loads. Submit riser diagrams with FU marked on each segment. Include major equipment selection.	Final Analysis as described in 30%.	Final Sizing with 60% comments incorporated.	Record copy of final sizing.

Table 2 – 4 (Part c) Plumbing Calculations Level of Completion					
Calculations	**Pre-Design Programming and Schematic Design 15% Submittal**	**Design Development 30% Submittal**	**Construction Documents 60% Submittal**	**Construction Documents 90% Submittal**	**Construction Documents 100% Submittal**
Natural Gas	None required.	None required.	Detailed analysis of demand based on equipment load requirements and system pressure. Include submission of riser diagram.	Final Analysis with 60% comments incorporated.	Record copy of the final analysis.
Code Analysis	None required.	Detailed data on required number of plumbing fixture in coordination with the building code analysis performed by the architect, based on the type of occupancy and population.	Final Analysis as described in 30%.	Final Sizing with 60% comments incorporated.	Record data.

Table 2 – 5 Electrical Calculations Level of Completion					
Calculations	**Pre-Design Programming and Schematic Design 15% Submittal**	**Design Development 30% Submittal**	**Construction Documents 60% Submittal**	**Construction Documents 90% Submittal**	**Construction Documents 100% Submittal**
Design Narrative	Preliminary Systems description and outline of design intent.	Updated systems description and outline of design intent.	Final systems description and narrative of design intent.	Final systems description and narrative of design intent with 60% comments incorporated.	Record version of systems description and narrative of design intent.
Lighting	None required.	None required.	Design to footcandles, including catalog cut sheets of each lighting fixture proposed.	Final calculations. Include calculations for all areas that cannot be calculated by the zonal cavity method, i.e., atriums, tunnels, concourses, hold rooms, parking lots, etc. with 60% comments incorporated.	Record calculations, complete.
Load	None required.	Load determined by square footage of facility + special systems.	Calculations including summation of all loads for all panelboards, distribution boards and switchboards/ switchgear with appropriate demand and diversity factors applied.	Final calculations including summation of all loads for all panelboards, distribution boards and switchboards/ switchgear with appropriate demand and diversity factors applied with 60% comments incorporated.	Record calculations.
Short Circuit Analysis	None required.	None required.	None required.	Complete short circuit calculations.	Record short circuit calculations.

Table 2 – 6 Fire Protection (Hydraulic) Calculations – Standpipe Systems					
Calculations	**Pre-Design Programming and Schematic Design 15% Submittal**	**Design Development 30% Submittal**	**Construction Documents 60% Submittal**	**Construction Documents 90% Submittal**	**Construction Documents 100% Submittal**
Design Narrative	Description of proposed systems and intent.	Detailed description of proposed systems and design intent adding the system total firefighting water demand, system available pressure, and available water.	Final system description and design intent.	Final systems description and design intent with the 60% comments incorporated.	Record version of systems description and design intent.
Fire hydrant Flow Test - Required for all fire protection calculations. No flow test required for hydrants tested within the previous 2 years.	None required.	Perform test and record data.	Hydrant flow test results data in written report.	None required.	None required.
Calculations and Full Standpipe Layout	None required.	None required.	Standpipe layout and hydraulic calculations. Identify most hydraulically remote hose connection.	Final calculations with 60% review comments incorporated.	Record version of final hydraulic calculations. Include hydrant flow test reports as part of hydraulic calculations.

Table 2 – 7 Fire Protection (Hydraulic) Calculations – Sprinkler and Combined Systems					
Calculations	**Pre-Design Programming and Schematic Design 15% Submittal**	**Design Development 30% Submittal**	**Construction Documents 60% Submittal**	**Construction Documents 90% Submittal**	**Construction Documents 100% Submittal**
Design Narrative	Description of proposed systems and intent.	Detailed description of proposed systems providing hazard group areas and sprinkler types. Include the system demand and available water.	Final systems descriptions and design intent.	Final systems description and design intent with 60% comments incorporated.	Record version of systems description and design intent.
Fire hydrant Flow Test -Required for all fire protection calculations. No flow test required for hydrants tested within the previous 2 years.	None required.	Perform test and record data.	Hydrant flow test results data in written report.	None required.	None required.
Computer generated hydraulic calculations and water supply curve.	None required.	None required.	Computer generated hydraulic calculations and water supply curve. Provide supply curve indicating 10% safety factor.	Final calculations and water supply curve with 60% review comments incorporated.	Record version of final hydraulic calculations, water supply curve, and hydrant flow test report.

2.12 Cost Estimating

2.12.1 Construction Cost Estimates: The A/E shall prepare and submit a construction cost estimate with all design submittals. All estimates shall be prepared by professionals skilled in construction cost estimating and are subject to approval by the Authority. The A/E shall be responsible for reviewing and validating all costs whether prepared by the A/E or by others. The services of any company engaged in construction work shall not be used for the preparation of estimates without prior approval of the Authority. A/E estimates shall be developed to the level of detail appropriate for the respective submittal. (Refer to **Section 2.4, Definition of Design Phases and Submittal Requirements**).

2.12.2 Estimate Presentation: Cost estimates/data within construction design submittals shall be presented in a legible format, organized per structure/facility function, sub-facility and/or project components per CSI or other formats as approved by the Authority, and in correlation with section titles and numbers of the contract specifications. The data should be in sufficient detail to reflect progress of design submission. Cost estimates shall be received by the Authority at the same date as the receipt of the design submission.

2.12.3 Estimate Format: Cost data shall be formatted as follows:

2.12.3.1 Estimates: Estimates shall be presented in a CSI format, or other approved formats, on computer spreadsheets or computer estimating system format. Each sheet shall be numbered and the total number of pages shall be indicted on each sheet using the X of XX format.

2.12.3.2 Estimating Methodology: Estimating methodology shall be consistent for all sections of the estimate.

2.12.3.3 For all Estimates: For all estimates, each detailed line item of work shall depict quantity of work, man-hours per quantity unit, total man-hours, quantity unit price and direct cost amount for labor, materials, equipment, subcontractors and the aggregate total.

2.12.3.4 Unit Prices shall be to the Nearest Cent: Total costs shall be to the nearest dollar with comas and without the dollar ($) sign. The dollar ($) sign shall be used only at appropriate subtotals and totals.

2.12.3.5 Airfield Civil and Utility Items of Work: Airfield civil and utility items of work shall be unit priced based on FAA specified pay items.

2.12.3.6 Landside Civil and Utility Items of Work: Landside civil and utility items of work shall be unit priced based on VDOT specified pay items.

2.12.3.7 Line Item Cost: A line item cost shall be included for mobilization.

2.12.3.8 Contractor General Conditions: Contractor general conditions, overhead costs and profit shall be applied to the subtotal of direct costs.

2.12.3.9 All Construction Pricing: All construction pricing shall be based on current costs at the time the estimate is prepared. The basis of such dollars shall be clearly stated.

2.12.3.10 For Specific Levels of Completion and Other Requirements: For specific levels of completion and other requirements, refer to specific submittal requirements in **Paragraphs 2.5** and **2.10**.

2.12.4 Estimate Data: The cost estimate submittal shall contain the following data:

2.12.4.1 Estimate Shall Include: Estimate shall include submittal type or level, date and have title of drawings and specifications.

2.12.4.2 Assumptions: All assumptions, allowances and restrictions that affect the estimate shall be clearly identified and should decline as design progresses.

2.12.4.3 Exclusions: Exclusions are potential cost items not currently addressed by the submittal documents; therefore, they cannot be assigned an accurate cost or allowance. They shall be clearly identified in the estimate and decline as design progresses.

2.12.4.4 For Each Facility or Major Component of the Estimate: For each Facility or Major Component of the estimate, a summary level of aggregate man-hours and direct costs shall be provided. The direct cost summation shall be further broken down by labor, material, equipment, subcontractor(s) and total cost.

2.12.4.5 For Project Summary: For project summary provide a summation of aggregate man-hours and direct costs. Further break down the direct cost summation by labor, material, equipment, subcontractors' costs, and total cost.

2.12.4.6 Contractor Markups: Contractor markups and contingency, as necessary, shall be applied at the "Project Summary" level.

2.12.4.7 Comparative Tabulation: A separate comparative tabulation of direct costs for major components and/or types of work, markups and total project construction cost shall be provided for the current estimate and the previous estimate.

2.12.5 Reconciliation of A/E Cost Estimates:

2.12.5.1 Reconciliation with Previous Estimates: All A/E cost estimates shall be reconciled to the previously submitted estimates.

2.12.5.2 Failure to Provide Reconciliation of Current Estimate with Previous Estimates: Failure to provide reconciliation of the estimate with previous estimates shall be cause for rejection of the estimate. A new estimate shall not be accepted until the previous construction cost estimate has been reconciled.

2.12.5.3 Authority Reconciliation: The Authority shall reconcile A/E's initial estimate based on the SOW and comments shall be forwarded to the A/E. A tabulation of significant variations in scope and cost shall be documented and provided to the A/E.

2.12.5.4 Subsequent Design Level Estimates: All subsequent design level estimates shall include a reconciliation section detailing significant variations in quantities and cost of items, facilities and systems between the current and previous construction cost estimate. The reconciliation shall document the reason for significant additions or reductions in scope, quantities, unit prices and costs between the current and previous construction cost estimates.

2.12.6 Contractor Proposal Solicitation Package: Assist the Authority in completing "Schedule III" of the Contractor Proposal Solicitation Package.

2.12.6.1 Schedule of Prices and Contractor Proposal Breakdown: The A/E shall be provided a copy of the Schedule of Prices and Contractor Proposal Breakdown forms. The A/E shall complete these forms based on its latest cost estimate.

2.12.6.2 Excluded:

A. The prices shall exclude Contractor/Subcontractor Bond costs.

B. The prices shall exclude the cost of insurances that are included under the Authority "Owner Controlled Wrap up Insurance Program" (OCWIP).

2.12.6.3 A/E Meeting Attendance: The A/E shall attend the Contractors Pre-Bid Meeting.

2.12.6.4 Amendments: Amendments to the Contractor Proposal Solicitation shall include a revised cost estimate and Schedule of Prices, if so required, reflecting cost changes due to the amendment. Revised estimates due to

amendments shall meet the requirements of the 100% Construction Document Submittal Estimate.

2.13 Constructability

2.13.1 General: Constructability is the process of review and application of ideas and methods that will result in a final product that can be built most cost-effectively and in the shortest period of time without sacrificing quality. Consider schedule, materials, access and staging, required construction equipment, available manpower resources, work methods and required standards throughout the design phases of the project. Develop the design and contract documents with consideration for constructability. Ensure that there are no ambiguities, inconsistencies, or other inherent problems that could lead to preventable difficulties for the Contractor. The constructability of the design rests primarily with the A/E. The Authority Project Managers and construction representatives will perform detailed constructability reviews during the various design review submittals. The constructability of the project shall be considered during the early stages of the design and continue through the final contract document.

2.13.2 Schematic and Design Development: At both Schematic and Design Development stage of design, the A/E shall:

2.13.2.1 Overall Plan: Develop an overall plan of execution of the construction work.

2.13.2.2 Assess: Assess the interface with other airport projects.

2.13.2.3 Standards for Construction: Establish the most effective methods of and minimum standards for construction.

2.13.2.4 Sequence and Logic: Establish the sequence and logic of construction activities.

2.13.3 Preparation and Review Requirements: At or prior to the 60% Submittal, the A/E shall review the design to identify any details that cannot effectively be constructed.

2.13.4 Final Assessment: Prepare a final assessment of construction phasing and performance duration.

2.14 Airport Operations During Construction

2.14.1 General: The Authority must safely conduct airport operations during the construction phase of the project and throughout the occupancy of the completed facility. Careful review is critical involving construction in the following areas: the AOA, passenger check-in, security screening, passenger departures and passenger arrivals. The A/E and the design of the facility shall ensure that the continued operational needs of Airport Operations, airlines, tenants, and concessionaires are determined at the Design Development phase of the design. Ensure the following: continuity of utility services, maintenance of vehicular access, and maintenance of pedestrian access, security requirements, and safety requirements. Refer to **Section III, Paragraph 2.9**. Consideration shall also be given to the flow of cargo, baggage, mail, goods, and supplies. Design shall be efficient to minimize the consumption of utilities in the re-sale and service activities. This paragraph is not intended to act as a complete “checklist” for the A/E. All coordination is the responsibility of the A/E.

2.15 Facility Maintenance and Operations

2.15.1 General: The design shall be reviewed for maintainability, including the following:

2.15.1.1 Life cycle costs.

2.15.1.2 Equipment Standardization.

2.15.1.3 Resources: Impact on existing Airport Engineering & Maintenance Department resources.

2.15.2 Training Requirements: When appropriate, the A/E shall determine and identify exact training requirements, using the manufacturers' recommendations.

2.15.3 Operations and Maintenance Manuals: Ensure that Operations and Maintenance Manuals requirements are clearly stated in the specifications.

2.15.4 Warranties and Guaranties: Ensure that warranty and guarantee document requirements are clearly stated in the specifications.

2.15.5 Systems Tests: Requirement for detailed systems test, adjustment, and balance documentation.

2.15.6 Clearances: Adequate accessibility and equipment clearances for maintenance and replacement.

2.15.7 Replacement Materials: Furnishing of replacement materials, spare parts, any specialized tools, for maintenance of equipment.

2.15.8 Other Maintenance Considerations: Other maintenance considerations such as access, storage, component maintainability, and operating parameters.

2.15.9 Specialized Training Equipment: Specialized training equipment needed to routinely and properly maintain the newly installed work should be included as a deliverable under the construction contract and available for use during training sessions.

CHAPTER 3 The Procurement Phase

3.1 Document Requirements

3.1.1 Final Construction Documents: During the completion of the final Construction Documents by the A/E, on all Authority-funded projects, the Authority will initiate the preparation of a Procurement Request authorizing a solicitation for proposals. The information needed for the preparation of the Procurement Request consists of the following:

3.1.1.1 Essential Elements: Definition of the project to explain essential elements, activities, or performance requirements.

3.1.1.2 Estimated Time: Estimated time of performance.

3.1.1.3 Estimated Cost: Final estimated cost of the project.

3.1.2 Contract Documents: When all contract documentation has been provided to the Authority Procurement and Contracts Department, the proposal documents will be issued to interested parties. The documents include the following:

3.1.2.1 Solicitation Provisions

3.1.2.2 Contract Provisions

3.1.2.3 Special Provisions: Special Provisions pertinent to the particular contract (normally prepared by the Authority).

3.1.2.4 Contracting Requirements and Supplementary Conditions.

3.1.2.5 General: General Requirements (Division 01 Specifications).

3.1.2.6 Technical Specifications.

3.1.2.7 Special Reports: Special reports (such as, soils information referenced in the plans or specifications).

3.1.2.8 Unit Prices: List of any unit prices of individual system prices requested from the Contractors with a definition of each. This must be correlated with Section 01 22 00, Unit Prices, of the specifications.

3.1.2.9 Drawings

3.1.2.10 Final Form: The documents shall be in the final form, incorporating all the 90% comments, dated, signed, and sealed by the A/E and ready for signatures representing Authority acceptance of the work. The reproduction of the solicitation documents will be handled by the Authority. To enable the timely reproduction of the documents for distribution to the offerors, the originals shall be delivered to the Authority at least two weeks prior to the anticipated issue date. It should be noted that there are other documents included in the final submittal package that are not necessarily issued to the offerors. Such documents are listed under “Deliverables” in the A/E SOW.

3.2 Pre-Proposal Conference

3.2.1 General: In order to encourage prospective contractors to submit a responsive and favorable proposal in response to the Request for Proposal (RFP), the Authority generally holds a Pre-Proposal Conference approximately two to three weeks prior to the due date of the proposals. The conference is held to explain the Authority procurement and proposal procedures, contract scope, schedule, special requirements and restrictions such as, fencing, security, safety and operational concerns. As part of the Pre-Proposal Conference, a visit to the project site is usually scheduled. Questions may be asked and discussed by the prospective contractors during the Pre-Proposal Conference and site visit. However, only written questions from the contractors will be formally responded to by the Authority and an Amendment to the RFP issued when necessary. The A/E may be required to participate in the conference.

3.3 Addenda

3.3.1 General: Addenda include clarifications, modifications, and/or revisions to the procurement package that generally cover missing information and necessary changes and answers to the written questions of the prospective offerors on the final Construction Documents. The A/E shall prepare the addenda to be incorporated into the RFP Amendments early enough to enable the Contracting Officer to issue an Amendment to the prospective offerors at least 10 calendar days prior to the proposal due date. The respondents are required to acknowledge any Amendments in their proposals. Addenda prepared by the A/E after issuance of the Contractor Proposal Solicitation shall include a revised Cost Estimate and Schedule of Prices reflecting the cost changes for each addendum. Estimates shall meet the requirements of the 100% Construction Document Submittal Estimate.

3.4 Conformed Construction Documents

3.4.1 General: Unless otherwise directed by the Authority, the A/E shall provide “conformed” Construction Documents to the Authority, incorporating all changes to the drawings and specifications that have been developed during the solicitation. These changes shall be made on the 100% Construction Documents and a new single original set of the 100% Conformed Construction Documents shall be provided to the Authority. All changes to the documents resulting from errors or omissions by the A/E shall be performed by the A/E at no cost to the Authority. Therefore, if the majority of the document changes are determined by the Authority to be the result of A/E errors or omissions, then the cost of producing all “conformed” documents shall be born by the A/E. The Authority will determine when and to whom to release these “conformed” Construction Documents; however, generally, the new set will be copied and issued during final stages of procuring the construction contract. As a minimum, the 100% “conformed” Construction Documents submittal by the A/E shall include the following:

3.4.2 Conformed Documents: 100% “conformed” drawings, specifications, calculations, and geotech report revised as required to “conform” to all technical addenda and amendments issued during the solicitation.

3.4.3 Cost Estimate and Construction Schedule: 100% cost estimate and construction schedule revised per the “conformed” documents.

3.4.4 Drawing Formats: Drawing formats required for the 100% “conformed” submittal shall include:

3.4.4.1 One Complete Digital Set of Documents: One complete digital set of documents (.tif or .pdf format) provided for use by the Authority for issuing printed sets to the contractor.

3.4.4.2 One Complete CADD Version: One complete CADD version on CD ROM for Authority electronic documentation. Refer to the **CADD volume**.

3.4.4.3 Two Full Size Sets: Two full size sets to be used for the Construction Permit Application.

3.4.4.4 Full Size Sets: One full size set for the COTR/RE, and one full size set for D/E Document Management.

3.4.4.5 Half-Size Sets: Half-size set copies as required by the COTR/Design Manager and the Design Engineering Task Manager.

CHAPTER 4 Construction Permits

4.1 Required for Construction

4.1.1 General: A Construction Permit, issued by the Authority, is required for most work. For specific information about requirements for building permits and under what conditions they are required, refer to the Authority Building Codes Manual.

4.1.2 Storage and Dispensing Tanks: All storage and dispensing tanks containing flammable or combustible liquids shall comply with the Virginia Statewide Fire Prevention Code.

4.1.3 Hazardous Materials: The storage, use, and/or disposal of hazardous materials shall comply with the Virginia Statewide Fire Prevention Code. A Hazardous Materials Permit shall be requested from the Authority Fire Marshal, 72 hours prior to the use or storage of hazardous materials. The permit shall contain a Hazardous Material Inventory Statement and Hazardous Materials Management Plan.

4.1.4 Fire Hydrants: Prior to any non-emergency use of a fire hydrant, a permit shall be obtained from the Authority Fire Marshal.

4.2 Application for Construction Permit

4.2.1 General: Whenever a Construction Permit is required, written application shall be made to the Building Official on behalf of the Contractor by the Authority under the signature of the Airport Manager. This can occur only after the construction contractor has been given Notice-to-Proceed and after the submittal of a valid and current Commonwealth of Virginia Contractor's License. For tenant-initiated projects, the application should be submitted to the Airport Manager by the Tenant who will forward it to the appropriate office. The application for Construction Permit shall be made by the submission of six copies of complete Construction Documents, including a minimum of drawn-to-scale plans with sufficient detail to show the nature and character of the work to be performed. All of the copies provided shall include the seal and signature of a Commonwealth of Virginia licensed Architect or Professional Engineer, or if exempt under state law, the name, address, and occupation of the individual who prepared the construction documents. There is no fee for Authority Construction Permits. In addition to the Construction Documents, the A/E shall provide the following items, each signed and sealed by a responsible representative of the firm:

4.2.2 Letter of Applicable Codes: Letter certifying that the design is based upon the interpretation of applicable codes and standards, with a full list of all such applicable codes and standards.

4.2.3 Letter on Special Inspections: Letter listing all materials and work which require special inspections during construction as required by the International Building Code, as modified by the USBC. If special inspections are not required, the letter shall certify that no special inspections are required.

4.2.4 Letter on Temporary Bracing: Letter defining temporary bracing during construction as required by the International Building Code, as modified by the UBSC. If temporary bracing is not required, the letter shall certify that no temporary bracing is required.

4.2.5 Accessibility Compliance Form for Alterations to Existing Structures: A completed Accessibility Compliance Form for Alterations to Existing Structures or a letter stating that the form is not applicable.

4.2.6 International Energy Conservation Code (IECC) Electric Energy Check List: A completed IECC Electrical Energy Check List or a letter stating that the form is not applicable.

4.2.7 List of Drawings: A list of "effective drawings", that is, those drawings that are required for full code review, listing the Drawing Number, Sheet Number, Name of Drawing, and Date indicated on each drawing.

4.2.8 Design Calculations: Complete Design Calculations as required by the International Building Code, as modified by the USBC.

4.3 Building Codes and Egress Analysis

4.3.1 General: The A/E shall provide a Building Code Analysis and an Egress Analysis of all structures covered by the USBC. As a minimum, the analyses shall state the type of construction; use group; occupancy load for all parts of the building; plumbing fixture counts calculated on the occupancy load; live load for each floor; any special stipulations, conditions, and/or modifications to the USBC; and a schematic diagram indicating corridors, exits, and maximum travel distances to the outside of the building. This information shall be included in the GN04 series of drawings. For more detailed information on the construction permitting process and requirements, please refer to the Authority Building Codes Manual.

4.4 Plans Examination

4.4.1 General: The Building Code Official will examine all plans in accordance with the procedures set forth in the Authority Building Codes Manual.

4.5 Interagency Coordination

4.5.1 Construction Permits: No Construction Permits shall be issued that require interagency coordination before the issuing office has received written notification from the applicable agencies that the plans have been reviewed and approved with or without conditions. Each A/E shall undertake such interagency coordination as follows:

4.5.1.1 Health Departments: For restaurants, food or drink preparation, hotel, and day-care facilities, approval shall be obtained from the Loudoun County and/or Fairfax County Health Department as appropriate for projects at Washington Dulles International Airport and the Arlington County Health Department for projects at Ronald Reagan Washington National Airport.

4.5.1.2 Interstate Commerce: For food products, water, and sanitation facilities used in Interstate Commerce, approval shall be obtained from the U.S. Public Health Service, Food and Drug Administration. These requirements include, but are not limited to food services, potable water systems, and sanitary disposal systems (triturators) at the airports.

4.5.2 Evidence of Public Health Agency Coordination

4.5.2.1 Evidence of Agency Approval: The A/E shall furnish written evidence to the Authority Project Manager that such proposed design is acceptable to the appropriate public health agency. Additionally, the A/E shall include in the Contract Specifications provisions to require the construction contractor to furnish written evidence of agency approval of the finished work to the Authority designated construction representative.

A. Public Health Service Coordination at Ronald Reagan Washington National Airport: The design and construction of any project that will affect a food or beverage handling service at Ronald Reagan Washington National Airport shall be reviewed by the Arlington County Department of Human Services. In projects involving preparation of food or beverages for in-flight services, the U.S. Public Health Service review and approval are required.

B. Public Health Service Coordination at Washington Dulles International Airport: The design and construction of all projects that will affect a food or beverage handling services shall be reviewed by the Loudoun County or Fairfax County Health Department, as appropriate. In projects involving preparation of food or beverages for in-flight services, U.S. Public Health Service review and approval are required.

4.6 Asbestos Inspection (USBC)

4.6.1 General: For special requirements for building permit applications for a structure that may have asbestos containing materials, particularly any building for which an

initial building permit was issued prior to January 1, 1978, refer to the Authority Building Codes Manual.

4.7 Issuing and Posting Construction Permits

4.7.1 General: For issuing and posting construction permit procedures refer to the Authority Building Codes Manual.

4.8 Water and Sewer Permitting Process

4.8.1 Construction and Modification of Sanitary Sewer Systems: All work involving the construction and modification of sanitary sewer systems at Ronald Reagan Washington National Airport and Washington Dulles International Airport requires coordination with the Virginia Department of Environmental Quality (VDEQ), Division of Wastewater Engineering (DWE). The A/E shall be responsible for providing design documents required by the VDEQ and DWE.

4.8.1.1 A/E Submittal Requirements: The A/E shall prepare and submit to VDEQ, with copy to the Manager, Building Codes/Environmental Department, the following:

A. Signed and sealed sanitary plans.

B. Signed and sealed sanitary specifications.

C. Signed and sealed Design Report.

D. Completed permit application signed by the Manager, Building Codes/Environmental Department.

E. Signed and sealed letter to the Manager, Design Department stating that the design complies with the Sewage Collection and Treatment (SCAT) Regulation.

4.8.1.2 A/E Responsibility: The A/E shall be responsible for responding to all VDEQ and Authority comments and correcting the application until accepted. All contact with VDEQ shall be recorded and submitted to the Manager, Building Codes/Environmental Department.

4.8.1.3 Dry Lines: Dry Lines are sanitary lines that shall be installed under the present project for the benefit of future planning and value engineering. VDEQ will not review these designs until such time that the lines will be activated. Therefore, a “Dry Line” submittal to the Manager, Building Codes/Environmental Department will be required. The requirements of this submittal shall be identical to 4.8.1.1 above, and shall be held for future submittal to VDEQ.

4.8.1.4 Operations and Maintenance and Training Requirements: The A/E shall specify all Operations and Maintenance and Training requirements for any sanitary pump stations on the project.

4.8.2 Construction and Modification of Potable Water Distribution Systems: All work involving the construction and modification of potable water systems at Ronald Reagan Washington National Airport and Washington Dulles International Airport requires coordination with the Virginia Department of Health (VDH), Division of Drinking Water (DDW).

4.8.2.1 A/E Submittal Requirements: The A/E shall be responsible for providing documents to The Manager, Building Codes/Environmental Department which will submit the application and documents to VDH. The documents provided by the A/E shall include the following:

A. A draft letter of transmittal to be signed by the Manager, Building Codes/Environmental Department.

B. Signed and sealed potable water plans.

C. Signed and sealed potable water specifications.

D. Signed and sealed Design Report.

E. Completed Permit Application.

4.8.2.2 A/E Responsibility: The A/E shall be responsible for responding to all VDH and Authority comments and correcting the application until accepted. All contact with

VDH shall be recorded and submitted to the Manager, Building Codes/Environmental Department. The A/E shall specify that the contractor shall provide bacteriological tests and a letter signed and sealed by a Professional Engineer registered in the Commonwealth of Virginia stating that the facilities have been installed in accordance with the plans and specifications. Upon receipt of the PE statement and satisfactory results of bacteriological analysis by the VDH, the water main may be placed into service.

CHAPTER 5 Contracting and General Requirements

A/E services during construction are usually a part of the A/E Contract as an option, to be exercised by the Authority on a project basis, as needed.

5.1 Typical A/E Services During Construction

5.1.1 General: The A/E firm that designed the project will normally have a definite role in providing certain services during construction. Specific services will be clearly identified in the SOW for A/E Services during construction. The following is a list of the typical services that the A/E may be requested to render to the Authority, depending upon the anticipated extent of involvement as determined by the COTR for A/E Design Services in coordination with the Resident Engineer:

5.1.2 Site Visits: To ensure the aesthetic quality of the project, compliance with the design intent, and design integrity of systems.

5.1.3 Observation of Work-In-Progress: Periodic observations during construction and during system acceptance, testing, and start-up.

5.1.4 Shop Drawing and Other Submittal Reviews: To assure conformance to design intent.

5.1.5 Change Orders Affecting Design: Prepare and/or review change order documents involving significant changes in design.

5.1.6 Requests for Information: Answer Requests for Information (RFI) and/or provide clarifications in Design Documents.

5.1.7 Technical Support Request: Prepare minor design changes as specified in a Technical Support Request (TSR) issued to the A/E by the Resident Engineer. Significant design changes required during construction will be processed as change orders.

5.1.8 Negotiations and Settlements: Assistance in Negotiations and Settlement of Claims and Disputes as requested by the Authority.

5.1.9 Preparation of Record Drawings: Responsible for preparing CADD Project Record Drawings from Contractor "RED LINE" drawings, if requested by the Authority.

5.1.10 Full-Time Staff: Provide full - time field staff throughout construction, as requested by the Authority.

5.1.11 Special Drawings and Exhibits: Preparation of special drawing and exhibits for public information and other Authority uses.

5.1.12 Attendance: Attendance at regularly scheduled progress meetings with the Contractor.

5.2 Review of Submittals

5.2.1 General: Shop drawings, catalogs, and samples are normally reviewed and approved by the original project A/E concurrently with the Authority during the construction phase. These shop drawings and catalogs will be utilized by the Authority for the maintenance and future replacement of various items and system components. The A/E must ensure that the Contract Specifications require that the Contractor clearly indicates on the shop drawing the date, sheet number, and specification or drawing reference.

5.3 Construction Phase Meetings

5.3.1 General: A/E may be requested by the COTR to attend construction phase coordination meetings including but not limited to weekly progress meetings, pre-installation meetings, job site meetings, partnering meetings, coordination meetings with contractors working on adjacent projects and other coordination meetings involving the Authority, concessionaires and tenants, and other outside agencies.

5.4 Drawing/Document Change Control

5.4.1 General: The A/E shall prepare drawings, specifications and/or reports during the construction phase if they are required for change orders designated by the Contracting Officer as "Program Scope Changes", "Field Conditions", or "Material Substitutions". Preparation of documents for change orders is not reimbursed when such changes are designated by the Authority as an "Error or Omission" within the resonsibility of the A/E.

5.5 Construction Close Out and Turnover

5.5.1 General: As a project nears completion there are a number of procedures to “close out” the project, that is, to complete the construction work, to prepare for occupancy and use of the facility, and to ensure that the requirements of the contract between the Authority and contractors have been satisfied. Start-up and operational test procedures must be incorporated with the project design and specifications. The Authority will issue a “Certificate of Occupancy and Use” prior to occupancy and use of the facility. The A/E must ensure that these actions are clearly specified in Contracting and General Requirements and technical specification Divisions 01 through 33 of the Contract Documents. Certificate of Occupancy will not be issued prior to acceptance of all required fire protection/ detection systems. Request for fire protection changes shall be coordinated with the Authority Fire Marshal prior to occupancy.

5.6 Supplemental Work

5.6.1 General: The A/E may be requested to produce supplemental drawings and/or specifications to accommodate changes to the work or to review shop drawings and other submittals during construction.

CHAPTER 6 The Post-Occupancy Phase

The Authority may require post-occupancy evaluation activities. This involves a systematic review of the facility after it has been constructed and occupied for enough time to have established a well-stabilized operational experience. The evaluation will focus on the occupants of the facility and the manner in which the facility supports their operational requirements. Occupants will typically include airport personnel, service contractors, air carrier, and other tenant and concessionaire personnel, together with the people serviced by the facility, including the general public. If the Authority desires to utilize A/E services in a post-occupancy evaluation, the Authority will contract with the A/E to draft and present a study plan for approval. This plan must address the procedure that will be employed to investigate the actual activity or service level being experienced. An assessment of the validity and effectiveness of the original design criteria and assumptions, and the manner in which the new facility supports these requirements, must be included. Effectively, a performance evaluation is prepared for the facility, incorporating functional reviews, technical compliance, and the interpersonal human resource effectiveness. The feedback from such a post-occupancy evaluation has potential benefit to both the A/E and the Authority. The A/E plan must, therefore, include a detailed proposal to report findings and recommend any actions needed to modify the facility or functional operation.

(This Page Blank)

CHAPTER 7 Standard Format for Reports and Specifications

There are specific format requirements for all submittal materials required by the A/E Contract. There are standard drawing cover sheets for each airport, title block sheets, and drawing numbering/designation schemes that must be complied with (refer to the following page). All reports (Design Reports, calculations, specifications, special reports, geotechnical reports, etc.) shall be accompanied with a standard cover design. Specification format follows the standard cover design.

TITLE OF REPORT
FOR
PROJECT NAME
PROJECT DESIGNATOR
AIRPORT NAME

line used if required

Prepared for:

line used if required NAME OF PRIME CONSULTANT FIRM
line used if required ADDRESS OF FIRM
line used if required ADDRESS OF FIRM

Prepared by:

NAME OF CONSULTANT
ADDRESS OF FIRM
ADDRESS OF FIRM

TELEPHONE NO. OF FIRM

[logo of prime consultant]

Box used if required

[LOCATION OF CONSULTANT SEAL AND SIGNATURE]

Date of Submittal

Submittal Phase
color of cover varies
by Phase; see p. DM 61.

[Header Text shall be in Times New Roman 8 point bold, all upper case; then two returns]

SECTION 01100 – SUMMARY **[Section Text, Times New Roman 11 pt.]**

Much of this Section consists of Project-specific data. Examples given in the model text in the Evaluations illustrate possible Section content. Use model text to develop text for specific Project requirements. See Evaluations.

Verify that Section titles referenced in this Section are Correct for this project's Specifications; Section titles may have changes.

PART 1 - GENERAL **[Part Text, Times New Roman 11 pt.]**

1.1 RELATED DOCUMENTS **[Article Text, Times New Roman 11 pt.]**

A. Drawings, Contract Provisions, Special Provisions, Supplementary Provisions, and other Division 1 Specification Sections apply to this Section. **[Paragraph Text and all body text, Times New Roman 11 pt.]**

1.2 WORK COVERED BY CONTRACT DOCUMENTS

This Article illustrates one method of summarizing the Work. Revise to accurately describe Project.

In four paragraphs and associated subparagraphs below, remove text enclosed in angle brackets and insert text to suit Project. See MASTERSPEC Evaluations for sample paragraphs of Project descriptions.

First paragraph and subparagraph below identify name and location of Project.

A. Project Identification: Project consists of **<Insert brief Project description>**.

1. Project Location: **[Washington Dulles International Airport] [Ronald Reagan Washington National Airport]**.

B. Architect Identification: The Contract Documents, dated **<Insert date indicated on the Contract Documents>**, were prepared for Project by **<Insert name and address of Architect>**.

C. Construction Manager: Parsons Management Consultants has been engaged as Construction Manager for this Project to serve as an advisor to the Authority and to provide assistance in administering the Contract for Construction between the Authority and Contractor, according to a separate contract between the Authority and Construction Manager.

1. For additional functions of Parsons Management Consultants, see Section "Supplementary Provisions."

In paragraph and first subparagraph below, include an abbreviated summary of the Work for Project described above. See MASTERSPEC Evaluations for examples of typical projects.

D. The Work consists of <Insert an abbreviated summary of Project>.

1. The Work includes **<Insert a brief listing of major products and systems included in Project>**.
2. For additional requirements for the examination of plans, specifications, and Project site, see Section "Supplementary Provisions."

Insert additional paragraphs for other major items of work. See MASTERSPEC Evaluations for model text.

1.3 CONTRACT

A. Project will be constructed under a general construction contract.

1.4 WORK SEQUENCE

Retain this Article if Project is conducted in separate phases. Delete if phased construction is not required. See MASTERSPEC Evaluations for discussion on phased construction.

Revise first paragraph below to suit Project conditions. See MASTERSPEC Evaluations for model text.

A. The Work shall be conducted in **<Insert number>** phases.

Retain below for each phase required. Remove text enclosed in angle brackets and insert text to suit that phase. Repeat subparagraph, revised as appropriate, for each separate phase. See MASTERSPEC Evaluations for model text.

1. Phase **<Insert number>**: **<Briefly describe work of this phase>** Work of this phase shall be substantially complete and ready for occupancy within **<Insert number of days>** of [**the Notice to Proceed**] [**commencement of construction**].

B. Work phasing indicated above is not intended to restrict Contractor to this specific phasing. Contractor may submit its own phasing schedule to COTR for review and approval.

C. Schedule the execution of the Work according to the phasing sequence indicated and to [**avoid**] [**minimize**] interference with normal functions of the Airport.

D. Before commencing Work of each phase, submit a schedule to COTR showing the sequence, the commencement and completion dates, and the move-out and move-in dates of personnel for the various phases of the Work.

E. On completion, each phase of the Work shall be fully operational.

1.5 WORK UNDER OTHER CONTRACTS

Retain this Article if work under this Contract depends on successful completion of work performed under other contracts and vice versa. See MASTERSPEC Evaluations.

Retain paragraph below if work under other contracts is expected to be complete before work under this Contract begins. Revise to suit Project conditions. See MASTERSPEC Evaluations for model text.

A. Separate Contract: The Authority [**has awarded**] [**will award**] a separate contract for performance of certain construction operations at Project site. Those operations are scheduled to be substantially complete before work under this Contract begins. The separate contract [**includes**] [**will include**] the following:

Retain subparagraph below for each separate contract. Remove text enclosed in angle brackets and insert text to suit Project. Repeat below as necessary to list all separate contracts.

1. **<Insert name of the Contract>**: A separate contract [**has been awarded**] [**will be awarded**] to **<Insert name of separate contractor>** [**to**] [**for**] **<Insert a brief description of work performed under separate contract>**.

Retain paragraph below if work under other contracts will be conducted concurrently with work under this Contract. Revise to suit Project conditions. See MASTERSPEC Evaluations for model text.

B. Separate Contract: The Authority [**has awarded**] [**will award**] a separate contract for performance of certain construction operations at Project site. Those operations will be conducted simultaneously with work under this Contract. This contract [**includes**] [**will include**] the following:

Retain subparagraph below for each separate contract. Remove text enclosed in angle brackets and insert text to suit Project. Repeat below as necessary to list all separate contracts.

1. **<Insert name of the Contract>**: A separate contract [**has been awarded**] [**will be awarded**] to **<Insert name of separate contractor>** [**to**] [**for**] **<Insert a brief description of work performed under separate contract>**.

Retain paragraph below if the Authority furnishes products for a project. Remove text enclosed in angle brackets and insert text to suit Project. Revise second sentence as appropriate, or delete entirely if not required. See MASTERSPEC Evaluations for model text.

A. The Authority will furnish **<Insert a brief description of Authority-furnished products>**. This Contract Work includes providing support systems to receive the Authority's equipment [and **plumbing, mechanical, and electrical connections**].

Retain subparagraphs below for all projects with Authority-furnished material.

1. The Authority will arrange for and deliver Shop Drawings, Product Data, and Samples to Contractor.
2. The Authority will arrange and pay for delivery of Authority-furnished items according to Contractor's Construction Schedule.
3. After delivery, the Authority will inspect delivered items for damage. Contractor shall be present for and assist in the Authority's inspection.
4. If Authority-furnished items are damaged, defective, or missing, the Authority will arrange for replacement.
5. The Authority will arrange for manufacturer's field services and for delivery of manufacturer's warranties to Contractor.
6. The Authority will furnish Contractor the earliest possible delivery date for Authority-furnished products. Using Authority-furnished earliest possible delivery dates, Contractor shall designate delivery dates of Authority-furnished items in Contractor's Construction Schedule.
7. Contractor shall review Shop Drawings, Product Data, and Samples and return them to COTR noting discrepancies or anticipated problems in use of product.
8. Contractor is responsible for receiving, unloading, and handling Authority-furnished items at Project site.
9. Contractor is responsible for protecting Authority-furnished items from damage during storage and handling, including damage from exposure to the elements.
10. If Authority-furnished items are damaged as a result of Contractor's operations, Contractor shall repair or replace them at Contractors expense.

1.9 SPECIFICATION FORMATS AND CONVENTIONS

A. Specification Format: With the exception of Federal Aviation Administration (FAA), the Specifications are organized into Divisions and Sections using the 16-division format and CSI/CSC's "MasterFormat" numbering system.

1. Section Identification: The Specifications use section numbers and titles to help with cross-referencing in the Contract Documents. Sections in the Project Manual are in numeric sequence; however, the sequence is incomplete as all available Sections and Section numbers are not used and the CSI numbering system is not sequentially complete. Consult the table of contents at the beginning of the Project Manual to determine numbers and names of sections in the Contract Documents.

B. Specification Content: The Specifications use certain conventions for the style of language and the intended meaning of certain terms, words, and phrases when used in particular situations. These conventions are as follows:

1. Abbreviated Language: Language used in the Specifications and other Contract Documents is abbreviated. Words and meanings shall be interpreted as appropriate. Words implied, but not stated, shall be inferred as the sense requires. Singular words shall be interpreted as plural, and plural words shall be interpreted as singular where applicable as the context of the Contract Documents indicates.
2. Imperative mood and streamlined language are generally used in the Specifications. Requirements expressed in the imperative mood are to be performed by Contractor. Occasionally, the indicative or subjunctive mood may be used in the Section Text for clarity to describe responsibilities that must be fulfilled indirectly by Contractor or by others when so noted.

   a. The words "shall," "shall be," or "shall comply with," depending on the context, are implied where a colon (:) is used within a sentence or phrase.

PART 2 - PRODUCTS (Not Used)

PART 3 - EXECUTION

Unless Project includes provisions for products ordered in advance, indicate that Part 3, as well as Part 2, is not used.

3.1 SCHEDULE OF PRODUCTS ORDERED IN ADVANCE

If products ordered in advance are included in Project, insert a schedule below. See MASTERSPEC Evaluations for information and a sample schedule.

END OF SECTION 01100 [End of Section text, Times New Roman 11 pt.]

(This Page Blank)

SECTION III: Design Criteria

CHAPTER 1 Introduction

This section is a compilation of design criteria for numerous materials, components, and assemblies that must be incorporated into the design of all facilities for the Authority. The A/E shall review this section in preparing the design drawings and customized Contract Specifications and shall incorporate all relevant requirements into the documents. These requirements apply to both Ronald Reagan Washington National Airport and Washington Dulles International Airport, unless specifically stated as a particular requirement of only one facility. Other standards are included as supporting volumes to this Manual. They include:

DCA Vol. 1 and 2: Ronald Reagan Washington National Airport Standards.

IAD Vol. 1, 2 and 3: Washington Dulles International Airport Standards.

CADD: CADD Design Standards.

(This Page Blank)

CHAPTER 2 Contracting and General Requirements

2.1 Code Requirements

2.1.1 General: The A/E shall design the project to comply with the current adopted edition (as of the beginning of Phase 2: Programming and Design Development) of Volume I - New Construction Code of the Virginia Uniform Statewide Building Code (USBC), the Authority Building Codes Manual, and the Virginia Statewide Fire Prevention Code. The Vice President for Engineering, Office of Engineering is the Authority Building Official. The A/E Statement of Work may also designate additional codes or standards applicable to the particular design.

2.1.2 In addition to codes and standards required by the USBC the following National Standards shall be followed during design.

National Fire Codes

NFPA 10:	Standard for Portable Fire Extinguishers
NFPA 11:	Standard for Low Expansion Foam and Combined Agent Systems
NFPA 11A:	Standard for Medium and High Expansion Foam Systems
NFPA 16:	Installation of Deluge Foam-Water Sprinkler and Foam-Water Spray Systems
NFPA 20:	Stationary Pumps for Fire Protection
NFPA 24:	Installation of Private Fire Service Mains and Their Appurtenances
NFPA 30:	Flammable and Combustible Liquids
NFPA 70:	National Electrical Code
NFPA 72:	National Fire Alarm Code
NFPA 80A:	Recommended Practice for Protection of Buildings from Exterior Fire Exposures
NFPA 96:	Standard for Ventilation Control and Fire Protection of Commercial Cooking Operations
NFPA 110:	Standard for Emergency and Standby Power Systems
NFPA 111:	Standard on Stored Electrical Energy Emergency and Standby Power Systems
NFPA 130:	Fixed Guideway Transit Systems
NFPA 170:	Standard for Fire Safety and Emergency Symbols
NFPA 241:	Safeguarding Construction, Alterations, and Demolition Operations
NFPA 291:	Recommended Practice for Fire Flow Testing and Marking of Hydrants
NFPA 407:	Aircraft Fuel Servicing
NFPA 409:	Aircraft Hangars
NFPA 415:	Airport Terminal Buildings, Fueling Ramp Drainage, and Loading Walkways
NFPA 502:	Road, Tunnel, Bridges, and Other Limited Access Highways
NFPA 704:	Standard System for the Identification of the Hazards of Materials for Emergency Response
NFPA 750:	Water Mist Fire Protection Systems
NFPA 1141:	Fire Protection in Planned Building Groups
NFPA 2001:	Standard on Clean Agent Fire Extinguishing Systems
NFPA:	All other applicable standards as deemed Appropriate

2.1.3 Projects must comply with requirements of several regulatory agencies:

Federal Department of Transportation Regulations

49 CFR 37:	Transportation Services for Individuals with Disabilities (ADA)
49 CFR 38:	Americans with Disabilities Act (ADA) Accessibility Specifications for Transportation Vehicles

Federal Aviation Administration Federal Aviation Regulations

Part 77:	Objects Affecting Navigable Airspace
Part 139:	Certification and Operations: Land Airports Serving Certified Air Carriers
Part 150:	Airports
Part 151:	Federal Aid to Airports
Part 152:	Airport Aid Program
Part 159:	National Capital Airports

Federal Department of Justice Regulation

28 CFR 36: Nondiscrimination on the Basis of Disability by Public Accommodations and in Commercial Facilities

National Capital Planning Commission, Regulations for Projects Designated with Historical Status
Transportation Security Administration (TSA)
Virginia Department of Transportation (VDOT)
Virginia Department of Soil & Water Conservation
Virginia Department of Environmental Quality (VDEQ)
Virginia Department of Health (VDH)
Occupational Safety and Health Administration (OSHA)
Environmental Protection Agency (EPA) Regulations
Health Codes of Loudoun, Fairfax, and Arlington Counties
Federal Department of Agriculture, US Public Health Service
United States Customs and Border Protection

2.1.4 Appropriate References: The A/E shall incorporate appropriate references to nationally accepted standards for the design, fabrication, and installation of particular equipment. Also, the A/E shall include in the design appropriate reference to the Airports' published Orders & Instructions (O&I) which address such topics as security, vehicle operations, AOA licensing, badging, radio communications, display of signs, and key control.

2.2 Access for Disabled Persons

2.2.1 General: The Authority requires that its facilities and services be designed to accommodate disabled individuals. The design for all projects, accomplished by the Authority and tenants, shall conform, as a minimum, to the Americans with Disabilities Act (ADA) enacted July 26, 1990 (P.L. 101-336; 42 U.S.C. §12101 note) and the federal guidelines developed there from.

2.3 Use of Noncombustible Materials

2.3.1 General: Except as provided for in **Section III, Paragraph 7.6, Wood and Wood-Veneer Products,** all new construction or remodeling of present structures shall use all noncombustible materials and be in accordance with the Uniform Statewide Building Code and the National Fire Protection Association (NFPA) Codes and Standards. Temporary construction trailers are exempt from this requirement, but all other code requirements must be met.

2.4 General Site Development Requirements

2.4.1 General: Site development plans for development of property at either airport shall be consistent with the airport Master Plan, as defined in the Airport Layout Plan (ALP), Land Use Plan (LUP), and sub-area plans and with the Design Manual and the supporting volumes. Site development plans shall contain sufficient information to determine the compatibility of the proposed project with authority policies and FAA guidelines. At a minimum, the site development plan shall describe the project, its location, dimensions, and impacts.

2.5 Design Aircraft

2.5.1 General: The A/E Statement of Work will specify the Aircraft Design Group that the structure will be designed to accommodate.

2.6 Height Limitations

2.6.1 General: The A/E shall include in requirements for all demolition and construction within the Airports that the height of Contractor equipment shall be limited to a height that shall not penetrate the Federal Aviation Regulations (FAR) Part 77 imaginary surfaces, unless otherwise approved in writing by the Authority. Prior to beginning work, the Contractor shall notify the Airport Operations Department and the Engineering & Maintenance Department of the respective airport where work is being performed, of the height of all cranes, boom trucks, scaffolds, or similar vehicles or construction that will be within the AOA.

2.7 Runway, Taxiway, and Taxilane Closures

2.7.1 General: If any project requires temporary closure of runways, taxiways, taxilanes or other AOA Movement Area

portions of the airport, special procedures must be referenced in the Special Provisions and technical specifications. A/Es should consult the Orders & Instructions of the Authority with respect to these special requirements. At Washington Dulles International Airport, refer to **O&I IAD 9-2-1**. At Ronald Reagan Washington National Airport, refer to **O&I DCA 9-2-2**.

2.8 Construction Adjacent to Metrorail

2.8.1 General: If a project at Ronald Reagan Washington National Airport involves construction of a physical structure adjacent to, under, or over an existing Washington Metropolitan Area Transit Authority (WMATA) facility or right-of-way, the project must comply with the WMATA, "Adjacent Construction Design Manual". It is the general policy of WMATA to review designs of this nature on a case-by-case basis to ensure that no adverse interference or other effects exist between WMATA facilities and the proposed construction. Coordination shall be made with the Office of Engineering and Architecture, Washington Metropolitan Area Transit Authority (WMATA), 600 Fifth Street, N. W. , Washington DC 20001, phone (202) 962-5128. Coordination with WMATA must occur through the Authority.

2.9 Work-Hour Restrictions

2.9.1 General: The nature and/or location of the construction work will determine if work-hours will be restricted in order to prevent interference with normal airport activities or meet other airport concerns. This includes interfering with airport operations, airport passengers, blocking airport roads, or performing other activities that could bring the Contractor into direct adverse contact with airport users or adjacent community concerns. Additionally, utility outages, noise restrictions and other construction related activities might cause restrictions to be imposed. The A/E shall coordinate with the Authority, during the design phase to confirm work-hour restrictions that will be considered in the project design and cost estimate.

2.10 General Coordination Requirements

2.10.1 General: Coordination with all tenants, concessionaires, carriers and Authority operations affected by each project is essential. For projects developed for the Authority, the A/E shall provide written confirmation that the required coordination with those affected has been completed. The Authority maintains full control of all interstitial space within both airport facilities. Coordination of the use of this space will be by the Authority. Tenants may use this space for various appropriate equipment and systems, provided they receive prior approval from the Authority. Written request for use of this space, along with a description of the equipment, materials, or systems to be installed, shall be included with the initial project design submittal. The Authority reserves the right to determine the final location for any installation within this space. The possibility of interference with normal airport operations involving passengers, air carriers and tenants, as well as safety issues, must be considered when determining the appropriate time period for each phase of work. In the event that adequate coordination measures have not been accomplished, it may become necessary to direct that specific work activities be completed during designated time periods.

2.11 Concession Services Relocations

2.11.1 General: The A/E shall incorporate requirements for required relocation of existing vending machines, storage lockers, telephones, advertising equipment, and other facilities and equipment, which shall be fully shown on the drawings. The proposed new locations, including staging areas and the required security/protection for each shall also be shown. Fixtures must be relocated and restored to operational condition within 24 hours. Any changes that will affect these fixtures shall be coordinated through the Authority and the appropriate owner.

2.12 Equipment and Material Storage

2.12.1 General: The A/E shall clearly show all Contractor staging areas in the design. The specifications shall require

the construction contractor to request approval from the Authority Fire Marshal for the storage of all hazardous materials. Refer to **Section III, Paragraph 3.8.**

2.13 Haul Routes

2.13.1 General: The A/E shall identify on the contract plans the construction haul routes on the airport in conjunction with the Authority and the needs of the project. The A/E shall include in the specifications the maintenance requirements; the contractor's requirement to coordinate with other projects/contractors on shared routes; and restoration requirements. The specifications shall indicate that on-Airport haul roads, between the project site and shared haul routes, shall be maintained by the contractor and shall be restored to original condition when finished of use as a haul route at no expense to the Authority. At Ronald Reagan Washington National Airport, trucks are prohibited from using the George Washington Memorial Parkway, which is controlled by the National Park Service. The A/E shall design temporary haul routes with the appropriate drainage, fencing, grading and associated requirements. The A/E shall indicate in the specifications and plans that when it is necessary to cross over curbs or sidewalks, the contractor shall protect them from damage. The contractor shall repair any damaged curbs and sidewalks at no cost to the Authority.

2.14 Project Signs and Promotional Advertising

2.14.1 Project Signs: If project signs are desired by the Airport, Contractor, A/E or others, the sign layout must be submitted and approved by the Authority.

2.14.2 Promotional Advertising: The contractor, subcontractors, manufacturers, and material suppliers may not use Authority projects for advertising or promotional purposes of any kind without the express written consent of the Authority. This restriction includes posting signs at the project.

2.15 Construction Contractor Quality Control

2.15.1 General: The Authority has adopted a standard specification for Contractor Quality Control that is incorporated into Division 01. This specification must be edited for the specific project. The A/E shall also incorporate complementary and detailed CQC requirements into each technical section of the specifications. This is a mandatory part of contract compliance during construction.

2.16 Warranties and Guarantees

2.16.1 General: The Contractor shall provide warranty/guarantee documentation for all structures, machinery, equipment or systems. Unless directed otherwise by the Authority, the designs shall incorporate the standard warranty and maintenance service requirements as required in MASTERSPEC© Sections located in Division 02-33. The A/E shall coordinate all technical specification sections with Division 01 "Product Requirements" and Project Closeout. The effective warranty commencement date for all products and installations shall be the date of Substantial Completion.

2.17 Testing and Operational Requirements

2.17.1 General: The A/E shall incorporate the requirements for testing and operational training and for the start-up and checkout of building systems in the project specifications.

2.18 Operation and Maintenance Manuals

2.18.1 General: The A/E shall incorporate in the specifications a requirement for the provision of Operations and Maintenance Manuals. Operations and Maintenance Manuals shall be provided for all materials and systems specified in Divisions 02 through 33 of the specifications. Specification Section 01 78 23 Operation and Maintenance Data contain requirements for the Operations and Maintenance Manuals and are provided by the Authority. The A/E shall also ensure that special Operations and Maintenance requirements beyond those in 01 78 23

Operation and Maintenance Data are specified in the Division 02 through 33 Technical Sections of the specifications.

2.19 Demonstration and Training

2.19.1 General: The A/E shall incorporate in the specifications the requirements for Demonstration and Training. Demonstration and Training shall be required for all complex equipment or systems particularly those that are the first of their kind at the airport or those whose application is unique to the project. Specialized demonstration and training requirements shall be specified in the technical sections in Divisions 02 through 33. Specification Section 017900, provided by the Authority, contains general requirements for demonstration and training.

(This Page Blank)

CHAPTER 3 Environmental Requirements

The A/E shall design all projects so that the work required in the Construction Documents incorporates all relevant requirements as set forth below.

3.1 Introduction

3.1.1 General: The Authority is fully committed to the protection and enhancement of the natural environment through compliance with and enforcement of all applicable federal, state, and local regulations in this area. The following standards and procedures have been established to provide a better understanding of Authority policies in this regard.

3.2 Storm Water Management

3.2.1 General: All storm water facilities shall meet the water quality standards, including water quality volume (WQC), for performance based or technology based criteria in accordance with the latest edition of the Virginia Storm Water Management Handbook.

3.2.2 Storm Water Pollution Prevention Plan: If the disturbance area of a construction project is greater than 2,500 sq. ft., the A/E shall incorporate a Storm Water Pollution Prevention Plan and the Authority Specifications Section entitled Storm Water Pollution Prevention Plan into the construction documents.

3.2.3 Erosion and Sediment Controls: Any construction project that involves excavation, backfill or disturbance of the existing ground shall require erosion and sediment control measures. The Erosion and Sediment Control Plan shall meet the requirements of the Virginia Erosion and Sediment Control Handbook. Prior to the start of any land disturbing activities, the Erosion and Sediment Control Plan shall be submitted to the Authority for approval. The Erosion and Sediment Control Plan shall meet the minimum requirements stipulated by the Virginia Code of Regulations, Section 4VAC 50-30-40 Minimum Standards. In the Design Report, the A/E shall provide a narrative, calculations, etc., to prove compliance with the Minimum Standards.

3.2.4 Discharges from Construction Sites

3.2.4.1 For projects located at IAD that disturb more than 2,500 square feet of land, the Contractor is required to obtain a General Permit for Discharges of Stormwater From Construction Activities from the Virginia Department of Environmental Quality prior to starting any land-disturbing activities.

3.2.4.2 For projects located at DCA that disturb 1 or more acres of land, or less than 1 acre but part of a larger common plan of development or sale if the larger common plan will ultimately disturb 1 acre or more, the Contractor is required to submit a Notice of Intent (NOI) for Stormwater Discharges Associated with Construction Activity under an NPDES General Permit to the EPA and obtain the Construction General Permit prior to starting any land-disturbing activities.

3.2.5 Pollution Prevention: Projects that will have an aggregate aboveground oil storage capacity greater than 1,320 gallons are required to prepare a Spill Prevention Control and Countermeasure (SPCC) Plan.

3.3 Discharges from Industrial Activities

3.3.1 General: The Authority has developed a facility Storm Water Pollution Prevention Plan (SPPP) for each airport. This SPPP requires that permanent pollution controls are to be incorporated, as appropriate and feasible, into all facility designs having the potential to release pollutants into the storm water stream. The A/E shall design the facility to minimize the volume of storm water in contact with industrial areas and potential pollution sources. The A/E shall analyze Best Available Technology Economically Achievable (BAT) and Best Conventional Pollutant Control Technology (BCT) for discharges in contact with potential pollution sources in accordance with National and Virginia Pollutant Discharge Elimination System Regulations. Engineering Controls or Best Management Practices shall

be designed to treat the first ½" of runoff, or an equivalent flow, for the drainage area.

3.4 Environmental Evaluation/Asbestos and Other Hazardous Materials

3.4.1 General: If A/Es discover asbestos-containing material or other hazardous materials at any time during the project, they must immediately notify the Authority and the Authority Fire and Rescue Department. The following components are summarized in the Building Codes/Environmental Department Environmental Review Checklist (ERC) that will be compiled by the Authority prior to the development of the Statement of Work and may be obtained from the Authority Building Codes/Environmental Department. Any environmental issues that have potential to impact the construction/demolition process will be addressed in Part B Specifications and Plans or as otherwise directed by the Statement of Work.

3.4.2 Environmental Evaluation: All design work shall be accompanied by an Environmental Evaluation of the project that includes but is not limited to the following components:

3.4.2.1 Hazardous Materials Survey: A hazardous materials survey of the site to identify Asbestos Containing Materials (ACM), lead-based paint, polychlorinated biphenyls (PCBs), and other hazardous materials present in the building and structures and/or in the underground utilities on site.

3.4.2.2 Hazardous Materials Inventory: Prepare a hazardous materials inventory statement for materials to be stored in the structure. Provide the hazardous materials inventory statement as part of the Environmental Evaluation and to the Authority Fire Marshal, during the design process.

3.4.2.3 Resourse Conservation and Recovery Act: Requirements for hazardous waste management of any materials utilized during construction.

3.4.2.4 Contaminated Soil/Groundwater: A site investigation to identify potential petroleum contaminated soil (PCS), other hazardous materials and/or contaminated groundwater on site. Identification of any contaminated groundwater found in utility structures shall also be included.

3.4.2.5 Air Permits: Application for and receipt of an air permit to construct and operate any regulated stationary emission source (such as, boiler, emergency generator, etc.).

3.4.2.6 Storm Water Pollution Prevention Plan: Preparation of a Storm Water Pollution Prevention Plan (SPPP) and the associated erosion and sediment control requirements for construction activities.

3.4.2.7 Water Quality Discharge Permit: Application for and receipt of a water quality discharge permit for any regulated process water to be generated during construction and/or as a part of the facility's future operations.

3.4.2.8 Underground Storage Tanks: Requirements for installation and removal of Underground Storage Tanks (USTs)/Above Ground Storage Tanks (ASTs).

3.4.2.9 Best Management Practices: Requirements for installation/construction of permanent Best Management Practices (BMPs)/water quality structures for improving storm water quality.

3.4.2.10 Wetlands Assessment: A wetlands assessment and determination along with any required nationwide and/or an Army Corps of Engineers 404 permits for proper mitigation activities.

3.4.2.11 Baseline Indoor Ambient Air Quality: Assessment of any activities, operations, or processes that can potentially degrade the ambient indoor air quality of a building and engineering design modifications required to address any deficiencies.

3.4.2.12 Sanitary Sewer Discharges: Identifiaction of any discharges to the sanitary sewer system including the category of wastewater and flow estimates.

3.4.2.13 Deicing/Anti-Icing Fluid Discharge: Identification and flow estimates for any deicing/anti-icing fluids and proposed discharge points. Identification of any related BMP/water quality measures shall be included as well.

3.4.2.14 Environmental Concerns: Investigations to address any other environmental concerns.

3.4.3 Survey for Hazardous Materials: Prior to commencement of any renovation or demolition work in any existing facility, a "survey for Hazardous Materials" shall be performed by the Authority on the area to be disturbed. Following completion of the survey, the Authority will provide a report to the A/E indicating the findings of the survey. If hazardous materials are found in the affected area, the report will also indicate what actions need to be taken to mitigate the situation. This report shall be reviewed and approved by the Authority Building Codes/Environmental Department and Authority Fire Marshal.

3.4.4 Asbestos Abatement: Any asbestos abatement required for any project will be managed by the Authority Environmental/Building Codes Department, and will be designed by a VA licensed asbestos project designer. Refer to **Section I, Paragraph 2.3**.

3.5 Underground Storage Tanks (UST)

3.5.1 General: All underground storage tanks shall be designed, installed, operated, and tested in accordance with local, state, federal, API and NFPA regulations. All new installations of underground storage tanks (UST) containing fuels or chemicals, designated hazardous by the EPA or the Commonwealth of Virginia, shall have an approved secondary containment system for both the tank and connecting piping. All USTs must be provided with a minimum 30-year manufacturer's warranty. All UST installations must have the proper leak detection, inventory control and overflow alarm mandated by applicable federal, state, and local laws (such as, the Virginia State Water Control Board and EPA 1998 technical upgrade mandates).

3.5.2 Tank Construction: All USTs for petroleum products storage with capacities greater than 10,000 gallons must be made of double-wall corrosion resistant coated steel. USTs for petroleum storage with capacities of 10,000 gallon or less may be made of double-wall corrosion resistant coated steel, or double wall fiberglass, compatible with the stored product. All associated product piping must be double-wall corrosion resistant coated steel, or double-wall fiberglass. Cathodic protection shall be provided for any portion of the tank and piping which is not fiberglass and shall be in accordance with standards published by the American Petroleum Institute and the National Association of Corrosion Engineers.

3.5.3 Leak Detection System: The UST system must have a liquid or vapor leak detection system that provides continuous monitoring of any part of the UST, including the piping and the annular (interstitial) space.

3.5.4 Alarm: The alarm output of the monitor shall provide two separate digital voltage signals to indicate the presence of leaked fluid and a high level alarm to prevent overflow. It shall also be capable of producing an audible or visual alarm to alert local personnel of potential tank overflow situations at the fill port area.

3.5.5 Overflow Protection: The UST must be equipped with a device, such as an overfill warning alarm and an overflow protection device to prevent spills. A spill containment system shall be used around the fill pipe.

3.5.6 Vapor Recovery: A Stage II vapor recovery system is required for all gasoline and aviation gasoline tanks.

3.5.7 Pressure Test: The UST system shall be tested for tightness by a pressure test after it is placed in the ground and before backfilling, in accordance with the manufacturer's instructions and the National Fire Protection

Association Standards (NFPA). Pipe testing shall be conducted separately from the tank testing. Primary piping shall be capped at both the tank connection and connections to the associated system to facilitate testing. UST, piping, and connections shall be tested with the pressure recommended by the manufacturer in the presence of the Authority. When air or other gas is used as testing medium, leak detection method shall use a soapy solution or vapor sensor on all joints to check for bubbling leaks. Primary piping shall be tested in the presence of the Authority designated construction representative before secondary containment is installed.

3.5.8 Installation Procedures: To ensure proper installation, all tanks and leak monitoring equipment shall be installed in accordance with procedures recommended by the manufacturer, the American Petroleum Institute, the National Fire Protection Association and Underwriters Laboratories, Incorporated. Written documentation shall be delivered to the Airport Engineering & Maintenance Department upon installation of an UST, certifying that the tank and related equipment has been installed in accordance with the noted procedures.

3.5.9 Installation Approval: The design and installation of the UST system shall be approved in writing by an accredited Corrosion Specialist of the National Association of Corrosion Engineers or a Professional Engineer. The written approval must identify the precise storage location and the product or products stored.

3.5.10 Fire Protection and Life Safety Standards: All work shall be performed in accordance with applicable NFPA standards and the Virginia Statewide Fire Prevention Code (VSFPC).

3.6 Removal of Underground Storage Tanks

3.6.1 General: Out-of-service underground storage tanks shall be closed in place or removed and disposed of as directed by the Authority in accordance with current federal and state regulations. A permit shall also be obtained from the Authority Fire Marshal prior to closure or removal of any underground storage tank.

3.6.2 Tank Purging: Prior to tank closure, all liquids and vapors shall be purged and cleaned from the tank.

3.6.3 Extent of Removal: Removal shall include all supply, return and vent pipelines, storage tank, contaminated soils, and miscellaneous equipment adjunct to the operation of the storage tank, such as pumps, electrical wiring, etc. Closure shall include all piping and miscellaneous equipment.

3.6.4 Removal Coordination: Removal shall be coordinated with the Authority Fire Marshal and the Authority Risk Management Department.

3.6.5 Tank Disposal: The removed tank shall be disposed of in accordance with the Commonwealth of Virginia Disposal Regulations, and proper supporting manifest certificate and other required documents shall be provided to the Authority.

3.6.5.1 Contamination: The site must be assessed for the possibility of soil and groundwater contamination from the tank.

3.6.5.2 Approved Manner: If the site assessment indicates that contamination has occurred, the contaminated soil and water shall either be removed and disposed in an approved manner or left in place as directed by the COTR after coordination with VDEQ or the EPA.

3.6.5.3 Recorded Results: In accordance with Authority requirements, the recorded results of the area assessment must be maintained for at least three years after permanent closure is completed. This closure record shall consist of the results of all tests, soil sample analysis, and site inspections.

3.7 Above Ground Storage Tanks (AST): Prior to the design of fueling system, adequate coordination with the intended facility user/operator is required to ensure that the proper and acceptable tank fill system configuration (gravity or pressurized) is provided. All above ground storage tanks containing fuels or chemicals designated hazardous by the EPA or the Commonwealth of Virginia shall be designed, installed, tested, and operated in accordance with local, state, federal, and Virginia Facility and Above Ground Storage Tank Registration Requirements (9VAC 25-130) and Pollution Prevention Requirements (9VAC 25-140). All above ground storage tanks shall be double wall or have an approved secondary containment system. All permanent or temporary tanks containing materials other than water shall have a barrier installed (Jersey barrier, guard rail, or bollards) to protect the tank from vehicular damage. Barriers shall be spaced to prevent small vehicles from passing in between.

3.7.1 AST Overflow Protection: Regardless of the type of fill port and/or fill adapters that are acceptable to the user/operator, a high level or overfill warning alarm shall be provided.

3.8 Hazardous Materials Storage

3.8.1 General: If the space being designed includes provisions for hazardous materials storage, it shall be designed in accordance with the Uniform Statewide Building Code, Virginia Statewide Fire Prevention Code and Authority Design Manual.

3.8.2 Fire Department Repository Container (Knox Box): In all publicly accessible buildings or as required by the Authority Fire Marshal, the design shall include a fire department repository container (Knox Box) in accordance with the requirements of the Virginia Statewide Fire Prevention Code. The type/model container shall be specified by the Authority Fire Marshal early during the design phase.

3.8.3 Placards

3.8.3.1 On all buildings, structures, and temporary or permanent tanks in which hazardous materials are stored, dispensed or handled, the design shall include a permanent reflective placard to be mounted on the tank or the exterior of the building. For above ground storage tanks, adhesive backed placards may be used. The Authority Fire Marshal shall determine the hazard rating of the material and the distance at which hazard ratings on the placards shall be visible. Sign and lettering size shall be based on this distance, as specified in NFPA 704, Standard System for the Identification of the Hazards of Materials for Emergency Response. Above ground storage tank placarding shall provide the following information:

Material product name
Hazard rating of the material in accordance with NFPA 704

3.8.3.2 For buildings, only the NFPA 704 hazard rating system placard shall be used. Placards shall be installed on buildings as specified by the Authority Fire Marshal.

3.9 Battery Charging Installations and Stationary Storage Battery Systems

3.9.1 Battery Charging Rooms/Installations: Battery charging rooms/installations may be provided to support industrial trucks, maintenance equipment, ramp service vehicles, stored energy emergency power systems, and uninterrupted power supplies. Battery charging installations are classified according to use as follows:

3.9.1.1 Powered Industrial Equipment.

3.9.1.2 Emergency/Standby power systems.

3.9.1.3 Miscellaneous Use.

3.9.2 Battery Charging Installations.

3.9.2.1 Location: The location of battery charging installations shall be approved in writing by both the Authority Building Code Official and the Authority Fire Marshal.

3.9.3 Exterior Installations: Exterior battery charging installations shall be located no closer than 50' to aircraft fueling operations or any area where the potential for flammable/combustible vapors exists.

3.9.4 Potential Vehicular Traffic: In areas where the potential exists for vehicular traffic, battery-charging equipment shall be protected from damage by vehicles.

3.9.5 Battery Charging Rooms and Equipment: Battery charging rooms/equipment shall be designed/installed in accordance with the Uniform Statewide Building Code, Virginia Statewide Fire Prevention Code, manufacturer's specifications, International Mechanical Code, NFPA 70-National Electrical Code, OSHA, and other applicable regulatory requirements.

3.9.6 Ventilation System: In rooms containing stationary storage battery systems regardless of electrolyte capacity, a hazardous fume/vapor exhaust ventilation system shall be installed to remove gases generated by batteries during charging. The ventilation system shall be installed in accordance with the Virginia Statewide Fire Prevention Code and International Mechanical Code. Adequate exhaust capacity shall be determined by either the International Mechanical Code or engineering analysis, whichever is more restrictive. Engineering analysis or sampling of actual vapor concentration levels under normal operating conditions shall verify ventilation design requirements and adequacy. Designers shall consult Material Safety Data Sheets and other applicable documents to determine the lower explosive limit and other safety related data required for system design.

3.9.7 Battery Gas Detection: All battery charging rooms/areas where the potential for hydrogen gas exists shall be equipped with hydrogen gas detectors to provide warning if the hydrogen gas level in the room exceeds the lower explosive limit. The detector shall cause the activation of a local audible warning device and the transmission of an alarm to the building fire alarm system. A sign shall be placed on the door: "Do Not Open When in Alarm."

3.9.8 Climate Control: Rooms or spaces where battery-charging equipment is installed shall be climate controlled as required to maintain temperature and humidity within the battery manufacturer's specifications.

3.9.9 Racks and Trays: Racks and trays shall be the corrosion resistant type.

3.9.10 Rooms and Spaces: Rooms and spaces shall be designed to provide a clearance of not less than 30 inches between battery charging equipment and combustible materials.

3.9.11 Danger Signs: Danger signs shall be placed on the entry side of all doors to rooms or spaces where battery charger installations are located. Signs shall be fabricated in accordance with OSHA regulations and include the words "Hazardous Area". Signs shall be 14" wide and 10" high. "No Smoking" signs shall be conspicuously placed in these rooms or spaces and at the entry doors to the room or space. Other signage shall be installed as required in accordance with applicable regulations.

3.9.12 Spills: For battery charging installations where the potential exists for large spills or as required by applicable regulations, corrosion resistant, liquid-tight floors with sills shall be installed.

3.9.13 Drenching and Flushing: Suitable facilities for quick drenching or flushing of the eyes and body shall be provided within 25 feet and as specified by the applicable regulatory requirement for immediate emergency use.

3.9.14 Spill Control Supplies and Equipment: A cabinet or other suitable method of storage for spill control supplies/equipment shall be provided at each battery charging area.

3.9.15 Fire Extinguisher: A portable fire extinguisher with a minimum rating of 4A:20B:C shall be provided within 10 feet of a battery charging station.

3.10 Removal of Airfield and Taxiway Pavement Markings

3.10.1 General: Many airfield and taxiway pavement projects involve the temporary or permanent removal of pavement markings. Much of the existing pavement markings were applied using coatings composed of lead based paint. The A/E shall determine if the pavement markings are composed of lead based paint. This can be done through record search, interviews, or if necessary, through chemical analysis of the paint samples. Procedures for testing and removal of the lead based paint should be addressed by an environmental design firm. If the paint is to be removed by power washing, the lead contaminated water will be collected, sampled and disposed of, off the Airport site. Temporary pavement markings may be installed with latex paint as the removal of these markings is not considered to create a hazardous material.

3.11 Air Pollution Abatement

3.11.1 General: All projects must comply with the requirements of the Authority air pollution control requirements. A/Es are required to inquire concerning specific environmental policies that apply to design activities at both airports.

3.12 Feasible Alternative Wetland Design

3.12.1 General: The A/E shall determine the presence of jurisdictional wetlands based on wetlands information provided to the A/E by the Authority. The A/E shall prepare an 8½" x 11" drawing at 1" = 100' scale which shows the limit of disturbance of the project, 30% grading detail, wetlands, and stream and open water ponds. The A/E shall demonstrate that there are no prudent and feasible alternatives to the modification of wetlands. This information will be submitted to the Authority for inclusion in a wetland permit application that will be prepared by others. An example of typical wetland application drawings can be provided upon the request of the A/E.

3.13 Flood Plain

3.13.1 General: When work is required within a flood plain, as shown on Federal Emergency Management Agency (FEMA) Flood Insurance Rate Maps and/or Flood Boundary and Floodway Maps, the A/E shall determine the effect of the activity on the flood plain and/or floodway. If necessary the A/E shall prepare documentation suitable for submittal to FEMA for the appropriate map revision/ amendment and obtain the map revision/amendment from FEMA.

3.14 Car and Bus Wash Facilities

3.14.1 General: Car wash and bus wash facilities shall be provided with a self-contained, closed loop (zero discharge) recycling system for recycling the wash water. Backflow prevention devices, as required by the Authority, shall be installed at incoming water lines.

(This Page Blank)

CHAPTER 4 Site Work and Exterior Utilities

The A/E shall design all projects so that the work required in the Construction Documents incorporates all relevant requirements as set forth below.

4.1 Access To Airports for Field Engineering Services During Design

4.1.1 General: A/Es and their subconsultants shall coordinate all field engineering services on both the airside and landside with the Authority Project Manager for Field Engineering Services during Design. The Authority Project Manager, in turn, will further coordinate with Airport Operations for scheduling access to the work areas and with the Engineering & Maintenance Department when clearances for underground utilities are required prior to proceeding with geotechnical borings or test pits. Requests for field engineering services require an initial work plan. This work plan shall be prepared in accordance with the operating procedures to be provided the A/E at the pre-proposal meeting. These operating procedures incorporate the requirements of The Metropolitan Washington Airports Authority Orders & Instructions, O & I 9-2-1, at Washington Dulles International Airport and O & I 9-2-2, at Ronald Reagan Washington National Airport for requesting closures or any work that would impact the unrestricted use of any runway, taxiway or taxilane. Field Engineering Services to be coordinated with the Authority Project Manager include field surveys and mapping, locating utilities, geotechnical fieldwork, archaeological investigations, and wetlands and EIS and EA investigations. All personnel working on Airport property must be familiar with and follow the Airport safety regulations and procedures in order to ensure that the work is performed in a safe manner. Coordinate all work on the airside with Airport's Program Manager and/or Airport safety personnel.

4.2 Survey Control System

4.2.1 General: Design, construction, or project survey work shall use monuments, benchmarks, or control points that are included in or established by the Authority Survey Control System.

4.2.2 Survey Control System - Ronald Reagan Washington National Airport: A horizontal and vertical traverse control network tied into the Virginia State Plane Coordinate System has been established for Ronald Reagan Washington National Airport. References to coordinates shown on the network plan are available in a report titled "Survey of Control Data, Ronald Reagan Washington National Airport April 2000" prepared by Rice Associates. The Authority Engineering & Maintenance Department is the Office-of-Record for the coordinate system documentation. Before undertaking any field survey work, the A/E shall obtain a copy of the control network plan and a bound copy of the control network descriptions from the Office-of-Record. All project survey work shall be tied into the established coordinate system.

4.2.3 Survey Control System - Washington Dulles International Airport: A horizontal and vertical traverse control network, tied into the High Accuracy Reference Network of the United States Geological Survey and the Virginia State Plane Coordinate System, and referenced as the Washington Dulles Airport Coordinate System (ACS), has been established at Washington Dulles International Airport. A bound report titled "Washington Dulles International Airport Survey Control Data-To-Reach Descriptions," prepared in 1996 by Dewberry and Davis, contains a listing of all monuments, along with their horizontal and vertical coordinate values. The Authority Engineering & Maintenance Department is the Office-of-Record for the coordinate system documentation. Copies of the report may be obtained from the Engineering & Maintenance Department or their designated representatives. All design, construction, and project survey work performed shall be tied into the established coordinate system.

4.3 Subsurface Report Requirement

4.3.1 General: For major structure and facility excavation, no construction will be permitted without adequate

knowledge of subsurface conditions as determined by soil investigations, field sampling, laboratory testing, and a written report provided by a qualified geotechnical consultant familiar with the execution of such work.

4.3.2 Geotechnical Investigation: The A/E shall develop a program to perform subsurface exploration and laboratory testing in the area of any proposed construction. The A/E shall explain the approach as part of the cost proposal required for the project. The explanation shall include technical issues to be resolved, field and laboratory methods to be used, estimated number and depths of borings, and other field's methods, estimated laboratory testing, and reporting methods. Before performing any field work, the A/E shall prepare a detailed work plan. The plan shall include the results of previous investigations relevant to the project. The work plan shall include proposed boring locations, details of investigation methods, coordination issues, and reporting schedule. The work plan shall be submitted to the Authority for review and approval before any fieldwork is performed.

4.3.2.1 Project Reporting Shall Utilize 1 of 2 Methods:

A. Separate Reports: Geotechnical Data Report and Geotechnical Baseline Report or Geotechnical Recommendations Report.

B. Other Reports: Combined Geotechnical Data and Recommendations Report.

4.3.2.2 Report Formatting: The method shall be coordinated with the Authority, along with other issues relating to report formatting. A draft report, for review and comment, shall be submitted for approval by the Authority. The final report shall include resolution of all comments provided by the Authority.

4.3.2.3 Geotechnical Investigation Methods: Investigation methods shall be tailored to the needs of the specific project. At Washington Dulles International Airport, seismic refraction surveys are required, for all projects requiring excavation, trenching or drilling into rock.. During the construction procurement process, contractors are provided the opportunity to view the seismic refraction survey data to determine appropriate methods to excavate, trench or drill the rock as well as selection of equipment to perform the work. The A/E may propose other methods of determining rock properties with approval from the Authority. Ground water conditions shall be investigated for each project, including significant excavations greater than 15'. This shall include the installation and monitoring of observation wells. When required, monitoring shall continue for at least six months to give an indication of seasonal fluctuation. The coordinates (northing, easting, elevation) of each boring or survey line shall be reported, using current airport standards. Boring logs shall include soil descriptions, blow counts, and all other relevant information. Refusal and its relation to top of rock shall be carefully explained and correlated to seismic refraction survey where available. Technical issues that may require resolution include, but are not limited to:

A. Nature and extent of unsuitable soils and recommendations for remedial methods.

B. Recommendations for other soil improvement methods, including excavations and replacement, geo-fabrics, and soil stabilization.

C. Pavement recommendations, including California Bearing Ration (CBR) values, for flexible pavements and the subgrade modulus (K value) for rigid pavements.

D. Foundation recommendations, including allowable bearing pressures, anticipated settlement, and issues relating to eccentric loading and uplift loading.

E. Recommended excavation methods based on seismic refraction results.

F. Ground water control recommendations.

G. Detailed recommendations for any other special construction.

4.4 Utility Line Relocation and Abandoned Utility Lines

4.4.1 General: Unless otherwise directed in writing by the Authority, new structures shall not be constructed over existing utilities. All abandoned ductwork, piping, and utilities shall be removed from the project site area and disposed of off Airport property in accordance with environmental regulations. The quantity and extent of utilities to be removed shall be determined by the Authority Project Manager. Prior to commencing any sub-surface disturbance activities, including soil borings or other geotechnical activities, the A/E shall submit a boring plan for approval. In addition, the A/E shall mark boring locations in the field and identify utilities within the site investigation boundaries. Once the borings and utilities are located on the site, the Authority will review the boring plan. No soil borings may commence without prior written authorization from the Authority.

4.5 Profile Drawings

4.5.1 General: The A/E shall provide profile drawings, to scale, for all proposed underground utilities. The profile drawings shall show all crossings between the existing and proposed utilities. The horizontal and vertical locations of existing utilities are to be verified by the A/E.

4.5.2 Pipe Invert Elevations: Proposed pipe invert elevations shall be shown every 50 ft. and at grade breaks of pipe on the utility profile drawings.

4.6 Existing Underground Utilities Coordination

4.6.1 Excavations: The A/E shall specify, in the construction documents that the contractor is to verify and mark utility locations prior to construction and protect all existing utilities. The document shall state that the contractor shall coordinate work with the Airport Engineering & Maintenance Department, COTR, and all other organizations that control underground utilities at the Airport or would be affected by construction work around utilities. The documents shall also state that the contractor is responsible for the repairs to utilities damaged by the contractor's work.

4.6.1.1 Underground Utilities: Where existing underground utilities or other construction are expected to be in proximity to proposed construction, or when approaching existing utilities or structures for connections, the trench must be opened a sufficient distance ahead of the work or test pits made to verify the exact location and inverts of the utility to allow for possible changes in line or grade.

4.6.1.2 Test Pits: Dig test pits in the location of the proposed connections to existing mains and make all measurements necessary to ensure proper connection. Any necessary changes in line or grade of work caused by failure to take such precautions shall be at the expense of the Contractor.

4.6.1.3 Excavate or Interfere With: When it is necessary to excavate near or interfere with, any sewer line, water service, drainpipe, catch basin, culvert, or other structures, maintain the same in working order. Repair and make good any damage done during the progress of the work.

4.6.1.4 Trench Excavation: Where existing utilities cross the trench excavation, they shall be adequately supported and protected from damage due to construction. All methods for supporting and maintaining these utilities shall be subject to review by the Authority's Airport Engineering & Maintenance Department. Care shall be taken to ensure that the existing utility grades and alignment are maintained and the pipe joints are not disturbed. Backfill shall be carefully placed and tamped to prevent damage or future settlement. Any damage or misalignment of the utilities due to construction or settlement shall be repaired by the Contractor at the Contractor's expense.

4.6.1.5 Sanitary Sewer Lines: Connections of sanitary sewer lines to a main line should occur only in manholes. Saddles and mud joints are not permitted.

4.6.2 Typical Utilities: Typical Utilities that must be surveyed prior to the start of any design or construction work include the following:

Storm Drainage, including De-icing Fluid Collection.
Sanitary Sewer
Industrial Waste (DCA only)
Electrical Power
Telecommunications
NAVAIDS
Airfield Lighting Control System
HTHW/CHW
Jet Fuel
Natural Gas
Potable Water
Dedicated Fire Water System (DFS)

4.6.3 Gas Line Coordination:

4.6.3.1 Ronald Reagan Washington National Airport: All work on the natural gas distribution system shall be coordinated and approved by Washington Gas Company. The A/E shall provide documentation of such coordination to the Authority.

4.6.3.2 Washington Dulles International Airport: All work on the natural gas distribution systems shall be coordinated with the Washington Dulles International Airport's Utility Services Division. Note that design and construction of all natural gas pipelines between the main gas stations and tenant meters is governed by Authority's Design and Construction Manual for Natural Gas for Washington Dulles International Airport, Metropolitan Airports Authority, and 49 CFR Part 192. The A/E shall include the following statement in the Construction Documents. "Design and construction of all natural gas pipelines between the main gas stations and tenant meters is governed by the latest Design and Construction Manual for Natural Gas for Washington Dulles International Airport, Metropolitan Washington Airports Authority, and 49 CFR Part 192. Contractor shall submit four copies of their Operator Qualification Plan for all covered tasks in accordance with the Design and Construction Manual for Natural Gas and regulations set forth in 49 CFR Part 192 to the Authority's Building Codes/Environmental Department for approval." The A/E shall also stipulate in the construction documents that "All required inspections shall be performed by an independent third party inspection firm hired by and paid for by the Contractor. Four copies of the qualifications of the third party inspection firm shall be submitted to the Authority's Building Codes/Environmental Department for approval."

4.6.3.3 Fire Department Notification: The A/E shall include in the Final Construction Documents the requirement that the Contractor notify the Authority Fire /Rescue Department before any work is performed on a natural gas distribution system.

4.7 Utility Line Connections and Shutdowns

4.7.1 General: When connections to existing utilities, (sanitary sewer, storm sewer, electrical, communications, telephone, steam, high temperature water, ventilation, air conditioning, gas, water, etc.) are to be made, the A/E must check to ensure that the existing Authority utility supply or discharge lines can meet the increased loads, existing drainage piping invert elevations, and existing water/gas meters meet current Code Standards and increased utility loads. During Design, the A/E must provide the Authority with an estimate of the increased utility loads and drawings that show connection details in order to obtain approval for the utility connections. The information shall be presented in the A/E Design Report and Calculations. Approval shall be obtained from the Authority through the Engineering & Maintenance Department.

4.7.2 Fire Protection System Shutdown: A "Utility Outage Request" shall be submitted and approved by the Fire Marshal, 96 hours in advance of the shutdown of any Fire Protection System (including Fire Suppression Systems, Fire Alarm/Detection Systems, Fire Hydrants, etc).

4.7.3 Utility Outage Procedures: Permission to conduct utility outages must be requested in writing and approved

96 hours (4 business days, excluding holidays) in advance of the requested outage date. A/Es shall include in the specifications the contract requirements for utility outages.

4.8 Excavation and Trench Work

4.8.1 General: In accordance with the Virginia erosion and sediment control handbook, no more than 500 linear feet of trench may be opened at one time. The A/E shall consult the Virginia Erosion and Sediment Control Handbook for further information regarding trenching activity. On the AOA, no trenches shall remain open overnight unless the Contractor is working on a closed portion of the Airport and special permission is obtained from Airport Operations. Any open holes or trenches shall be prominently marked with cones, barricades and orange flags; layout of barricades shall meet the requirements of the Orders & Instructions IAD 9-2-1 for Washington Dulles International Airport and DCA 9-2-2 for Ronald Reagan Washington National Airport, and shall have steady-burning red lights attached if a trench is left open overnight. Coordinate with Airport Operations with regard to all barricades and lights. Excavation slopes or trenching shall be in accordance with the Construction Safety Manual. The Contractor shall place a steel plate across roadway excavation during periods that the site is not being actively worked. The steel plate shall be of sufficient strength to support truck traffic, shall have a minimum 2 feet bearing surface on each side of the opening and shall be prevented from sliding by steel spikes and a built-up asphalt restraining lip at all sides. Roadway construction signs shall be placed to warn approaching vehicles of construction and shall be maintained throughout the construction period. Temporary installations shall meet all applicable codes adopted in the jurisdiction and temporary ground support systems shall meet the minimum specified standards of the Authority, WMATA, and utility companies when adjacent to their facilities. Excavation across roadways shall occur only between 10:30 P.M. and 6:30 A.M. at Ronald Reagan Washington National Airport. Scheduling at Washington Dulles International Airport shall be coordinated with the Authority.

4.9 Blasting

4.9.1 Ronald Reagan Washington National Airport: Blasting is not permitted.

4.9.2 Washington Dulles International Airport: Blasting may be permitted on a case-by-case basis depending upon individual project needs, and upon review and Authority approval in writing of the A/E's recommendation and design submission.

4.9.2.1 High Risk Area: The area between the Main Terminal on the north and future Tier 2 on the south is a high-risk area. It includes nearly all the existing major structures on the Air Operations Area (AOA). Within this high-risk area, blasting must be strictly controlled.

4.9.2.2 Blast Effects: In addition to assessing the risk of damage to existing structures which may result from blasting, the A/E shall also examine the effect of blasting on adjacent rock formations. Blasting may change pre-blast geotechnical properties, thereby invalidating designs for existing and future structures which may have been based on these pre-blast geotechnical properties.

4.9.2.3 Blast Design and Analysis and Report: When considering the use of Blasting as the most suitable method of rock excavation, the A/E shall prepare and submit a Blast Design Analysis and Report for the Authority's review and approval.

4.9.2.4 The Blast Design Analysis and Report Shall:

A. Identify project-specific constraints, critical variables, and risks including aircraft movements, mobile lounge routing and schedules, blasting time windows, use of non-electric activation mechanisms, use of blasting mats, and other considerations. Safety requirements specified in the Authority's Construction Safety Manual shall also be addressed.

B. Establish rock damage zone.

C. Examine impacts to existing geotechnical investigation data.

D. Establish safe vibration limits for all critical structures, utilities, and existing rockmass and provide the basis for these limits.

E. Propose a blasting design to ensure operational and work place safety from airblast and flyrock.

F. Assess damage mitigation methods including "Perimeter Control Blasting" techniques.

G. Indicate whether or not blasting has cost and schedule advantages over other excavation methods.

H. Provide recommendations.

4.9.2.5 Subsequent to Blast Design Analysis and Report Approval: Should the Authority allow blasting on a specific project, edit Section "Earthwork" to include blasting requirements. Ensure that the "Earthwork" Section contains, as a minimum, the following:

A. Contractor's submittals

B. Code compliance

C. Blasting safety requirements

D. Blasting technical criteria and constraints

E. Compensation method.

4.9.2.6 Permission to Blast: Ensure that the specification includes the following:

A. Contractor may not blast until the Authority approves both the Blast Design Analysis and Report and blasting technical specification.

B. Contractor shall not transport or store explosives on Airport property without written approval from the COTR and the Authority's Fire Marshal.

C. In addition, obtain an Explosive/Blasting Permit from the Authority Fire Code Enforcement Division.

4.10 Underground Utility Markings

4.10.1 General: A/E shall specify detectable magnetic plastic tape with metal core manufactured specifically for warning and identification of underground utilities as listed below. Tape shall be detectable by an electronic detection instrument. Provide tape in rolls, 6 inch minimum width, color coded as listed in the chart below, with warning and identification imprinted in bold black letters continuously over the entire tape length. Warning and identification shall be "Caution Buried Water Line Below" or similar. Use permanent code and letter coloring unaffected by moisture and other substances contained in trench backfill material. Bury tape with the printed side up located 18" directly above the pipe.

Utility	Color
Electric	Red
Natural Gas/Fuel Pipeline	Yellow
Telecommunications	Orange
Water/Chilled Water	Blue
Sanitary/Force Main	Green
Storm	Green
HTHW/Steam	High-visibility Safety Yellow

All plastic gas lines shall have a No. 12 copper trace wire installed 6" above gas lines. For plastic gas lines installed using directional drilling or equivalent boring method, the trace wire and the pipe may be pulled into the same bore.

4.11 Vitrified Clay Pipe

4.11.1 General: Vitrified clay pipe shall not be used.

4.12 Seeding and Sodding

4.12.1 General: At Ronald Reagan Washington Airport, areas of work on or adjacent to land owned by the National Park Service, disturbed turf surfaces shall be repaired by sodding if disturbed turf surfaces are visible from the mainline roadway or from Mount Vernon Trail. For disturbed surfaces out of sight from these routes, repair may be by seeding. At both airports, all areas within 6' of the edges of airfield pavements, runways, taxiways, and aprons shall be sodded and sod shall be secured from detrimental effect of jet blast. For specific seeding mixes at Washington Dulles International Airport, refer to IAD **Vol. 1, Section I**. For specific seeding mixes at Ronald Reagan Washington National Airport refer to the **Airport Landscaping Master Plan**.

(This Page Blank)

CHAPTER 5 Civil

The A/E shall design all projects so that the work required in the Construction Documents incorporates all relevant requirements as set forth below.

5.1 Air Operations Area (AOA) Pavements

5.1.1 General: Designs for pavements and their related features on the AOA for runways, taxiways, taxi lanes and aircraft parking apron shall be developed utilizing the latest FAA Advisory Circulars as guidance.

5.2 Landside and Airside Roadways and Parking

5.2.1 General: Roadways and parking facilities on landside and airside shall be developed utilizing the latest Virginia Department of Transportation (VDOT) design standards and specifications as guidance. Minimum 8' – 6" wide parking spaces (except for accessible parking spaces) are required. When standard design elements developed by agencies or organizations independent of the Authority are incorporated into the project design all information regarding these standard elements must be included in the project Contract Documents. This information may not be included by reference only. The A/E shall consult with the Authority who will provide the current layout and geometry of the entrance and exit islands. For Fire Protection requirements, such as emergency access, hydrant location, and line size, all designs must conform to NFPA 1141, Fire Protection in Planned Building Groups.

5.3 Traffic Signals

5.3.1 General: Traffic signals required at intersections at either airport shall conform to the requirements contained in this section and the latest editions of the following VDOT reference publications, "Road and Bridge Specifications", and the "Road and Bridge Standards". Traffic signal controllers, master controllers, auxiliary equipment, and flashers for operating flashing beacons shall be certified by the manufacturer as conforming to the requirements of NEMA TS-2, and any exceptions and additions stated herein unless otherwise specified, in accordance with VDOT Specification Section 703. 02. The general construction items, methods, and procedures common to traffic control devices shall be in accordance with VDOT Specifications, Sections 700, 701, 703, and 704. The A/E shall consult with the Airport Engineering & Maintenance Department to determine the manufacturer of the existing traffic signal controller equipment in use. A coordinated or closed-loop system shall require compatible equipment.

5.3.2 Traffic Signal Poles: The mast arm type traffic signal poles shall be used for all intersections. Details shall be in accordance with VDOT Road and Bridge Standards. The pole shaft length may be either extended or cut-off, 12", above the mast arm's mounting bracket. Future needs may suggest that the pole shafts be extended for possible applications of cameras, sensors or lighting. The A/E shall verify with the Authority the length of the pole shaft. The plans and details must state the pole shaft length(s).

5.3.3 Pedestrian Signals: The placement of the pedestrian signals' push buttons, to activate the pedestrian phase, must be adjacent to the sidewalk to ensure ADA compliance. It may be necessary to extend the existing or proposed sidewalk to the location of the pole- mounted push buttons to provide access.

5.4 Security Fencing and Vehicle Gates

5.4.1 Security Fencing: Security fencing at the perimeter of both airports shall be substantial and permanent construction with poured concrete footings and cross bracing.

5.4.1.1 Standard Fence: Standard fence shall be Polyvinyl chloride (PVC) coated galvanized steel as shown in **Exhibits III-5-1 and III-5-2**. Fences that are not visible from public roadways may be galvanized steel only with prior approval by the Authority in writing.

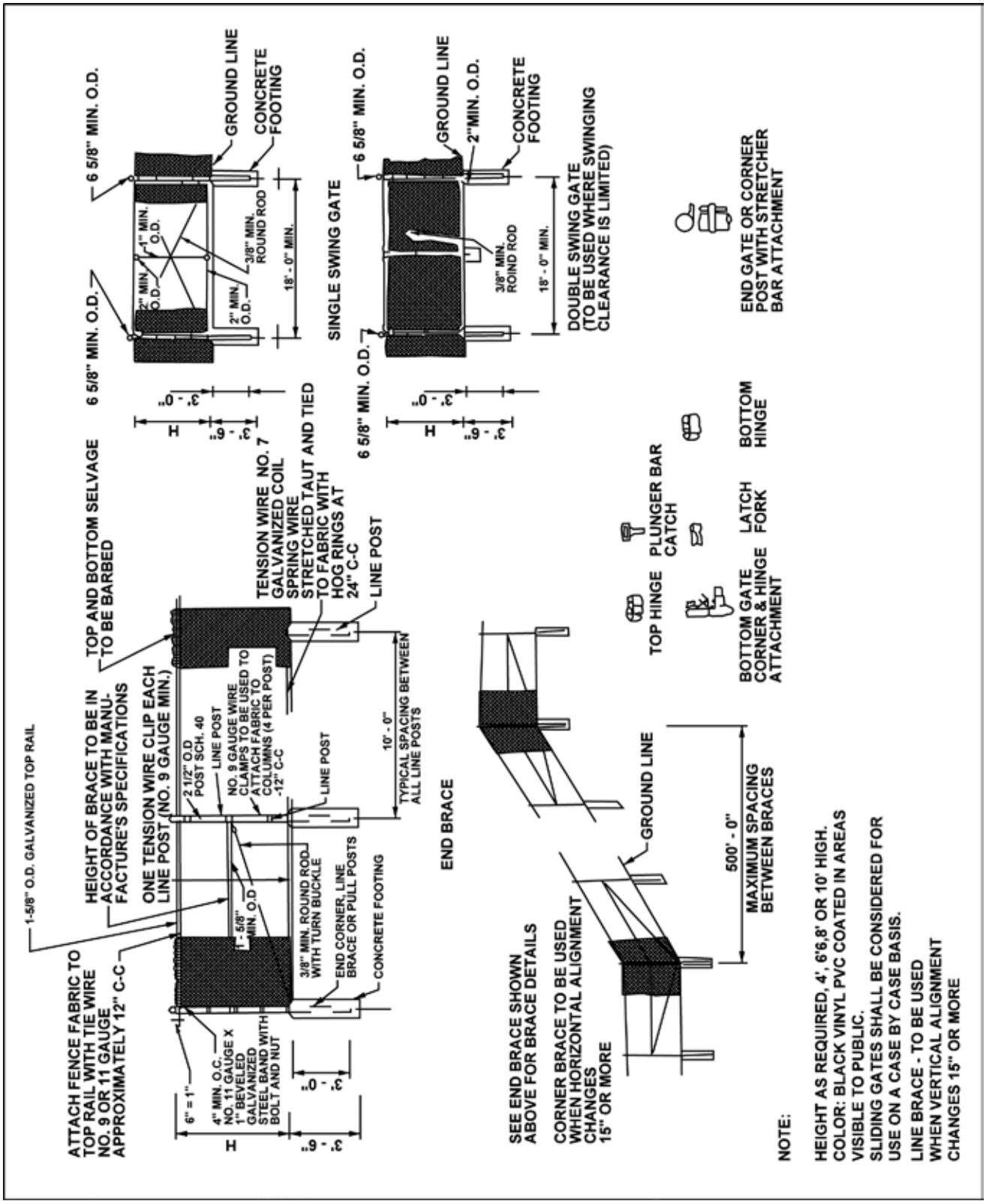

Standard Chain Link Fence Exhibit III-5-1

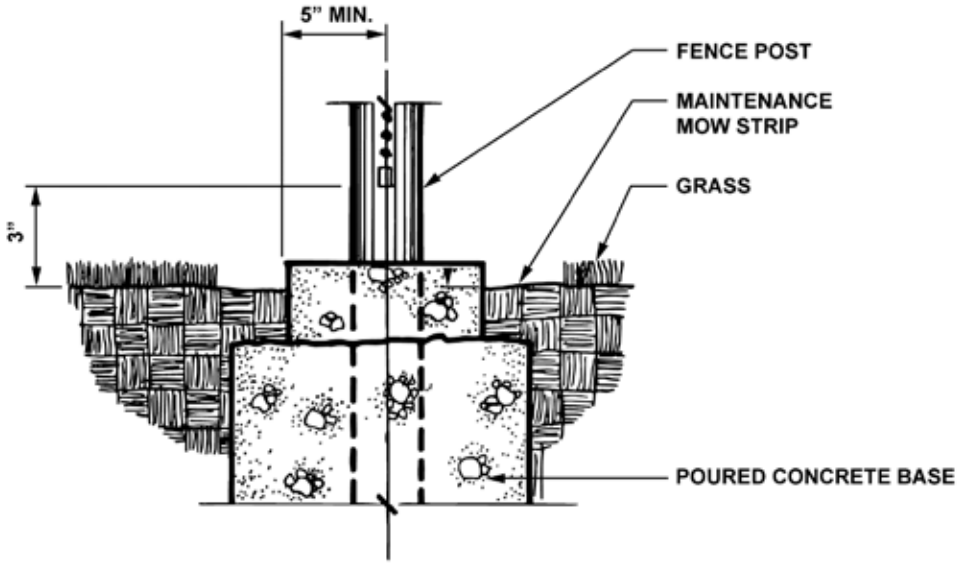

FENCE POST BASE
(INSTALL IN AREAS
VISIBLE TO PUBLIC)

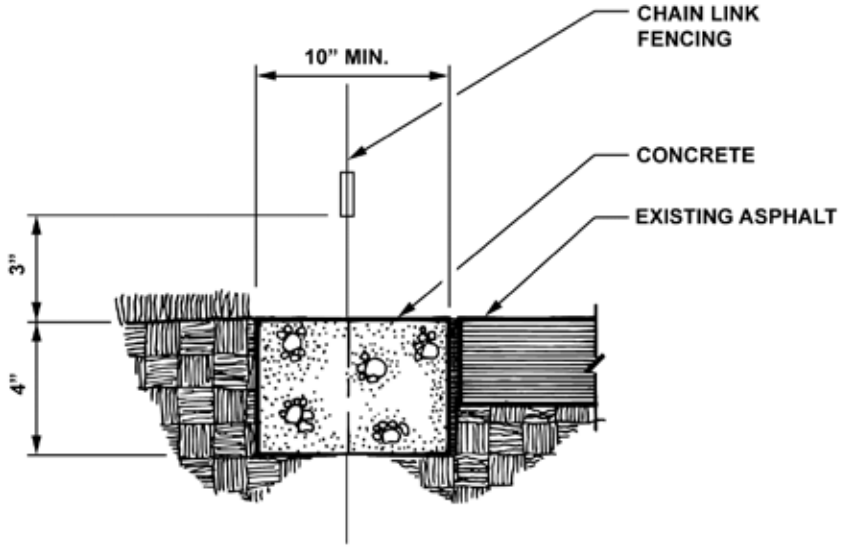

MOW STRIP

Typical Fencing Base Detail Exhibit III-5-2

5.4.1.2 AOA Fence: AOA Fence shall be black PVC coated galvanized steel with three strands barbed-wire extension arms as shown in **Exhibits III-5-3 and III-5-4.** Fences that are not visible from public roadways may be galvanized steel only with prior approval by the Authority in writing.

5.4.1.3 Temporary Fence: Temporary Fence shall be galvanized steel with single strand barbed-wire as shown in **Exhibit III-5-5.**

5.4.2 Material Specification:

5.4.2.1 Fencing: Fencing shall be galvanized steel mesh, posts, rails, ties, wire and bracing. All components shall be PVC coated.

5.4.2.2 PVC Coating: PVC coating shall be thermally fused and adhered to a primer that is thermally cured onto galvanized steel. Minimum PVC coating shall be 10 to 14 mils, and black in color.

5.4.2.3 Mesh Steel: Mesh steel wire core shall be minimum 11 gauge. Overall, 2" mesh meeting ASTM F 668, Class 2b.

5.4.2.4 Fabric Ties: Fabric ties wire cores shall be minimum 9 gauge.

5.4.2.5 Barbed Wire: Barbed wire shall be 14 gauge, 4-point aluminum barbs spaced 3" apart. Line wire core shall be 12 gauge.

5.4.2.6 AOA Barbed Wire Arm: Barbed wire arms shall support three strands of barbed wire and shall be set at a 45º toward the outside (non-AOA side) and shall be of sufficient strength to support a point load of 200 lbs. at the end.

5.4.2.7 Bottom Tension Wire: Bottom tension wire shall be seven gauge coil spring wire core, stretched taut and tied to fabric with hog rings at 24" on center.

5.4.2.8 Horizontal Braces: Horizontal braces, with diagonal ⅜" truss rods and turnbuckles shall be installed at all terminal posts.

5.4.2.9 Top Rail: Top rail shall be 1⅝" diameter Schedule 40 pipe.

5.4.2.10 Aircraft Cable: AOA area fences shall have ¾" aircraft cable attached to posts with ½" U-clamps, SAE grade 3 or better.

5.4.2.11 Posts: All posts shall be set in concrete footings at a depth of 36" minimum. If rock is encountered, drill a hole 2" larger than the diameter of the posts to a depth of 12", the posts shall be set plumb and the holes filled with grout (one-part Portland cement and two-parts mortar sand), and space above the rock to grade shall be filled with concrete.

5.4.2.12 Line Posts: Line posts shall be 2½" diameter Schedule 40 pipe, spaced no further apart than 10' – 0".

5.4.2.13 End and Corner Posts: End and corner posts shall be 4" diameter Schedule 40 pipe.

5.4.2.14 All Posts: Pull posts shall be 4" diameter Schedule 40 pipe, installed in all stretches of fence longer than 400' – 0". Maximum distance from any corner to a pull-post shall be 200' – 0". Pull posts shall be braced in two directions.

5.4.2.15 Gateposts: Gateposts shall be designed for the imposed dynamic loads, but shall not be less than 6⅝" diameter Schedule 40 pipe.

5.4.2.16 Gates Larger Than 18' Wide: Posts, bracing, and post footings for all gates larger than 18' wide openings shall be designed for all imposed loads.

5.4.2.17 Post Caps: All posts shall have finished caps.

5.4.2.18 Vehicle Security Gates: Vehicle Security gate openings shall be 17'-6" wide; gate leaves shall be

constructed of 9 gauge aluminum box tubing 28'-6" wide, 8' high plus one foot to support three strands of barbed wire. All gates shall be designed to be uniform in both size and type (aluminum box tubing with cantilever support exclusively at IAD; steel pipe frame using the roller wheel used exclusively at DCA). The open box channel welded to the frame for the cantilever support "Roller Gate Truck Assembly" must be interchangeable with Master Halco Part # 930035. Any gate vertical support posts shall be 4" Schedule 80 galvanized pipe. The design and installation of vehicle security gates requires hydraulic slide operators. Each high speed hydraulic slide operator must utilize the "Smart Touch" control as found on the high speed HySecurity Gate Operator, Model 222 X2 ST. Typically, card readers are to be I nstalled for both the entrance and exit (there may be instances where free ingress or egress can be allowed).

Loop detectors shall be inherent to the gate operator utilizing din rail mouonted 11 pin socket connections and must be included in the gate operator design by the manufacturer. Loop cables shall be type IMSA 51-7, cut at a depth of no less than 2", and shall enter into ground handholes (via conduit) which are located no more than one (1) foot from the edge of the drive lane. The loop wire shall be wrapped four times, with safety loops located 4' from the gate leaf. Safety loops shall be 4' x 8' with the 8' portion run parallel to the gate. Activation and safety loops will connect to the operator; only gate control shall be routed into the operator; no alarm circuits shall connect to the operator. All conduits shall be placed in the concrete operator pad and shall enter the operator housing through portals provided by the manufacturer. Power and control shall be in separate conduits and handholes marked on the lid indicating POWER and CONTROL. Card reader input, emergency vehicle access and breach control shall be from the node or module controlled by MWAA Operations security contractor.

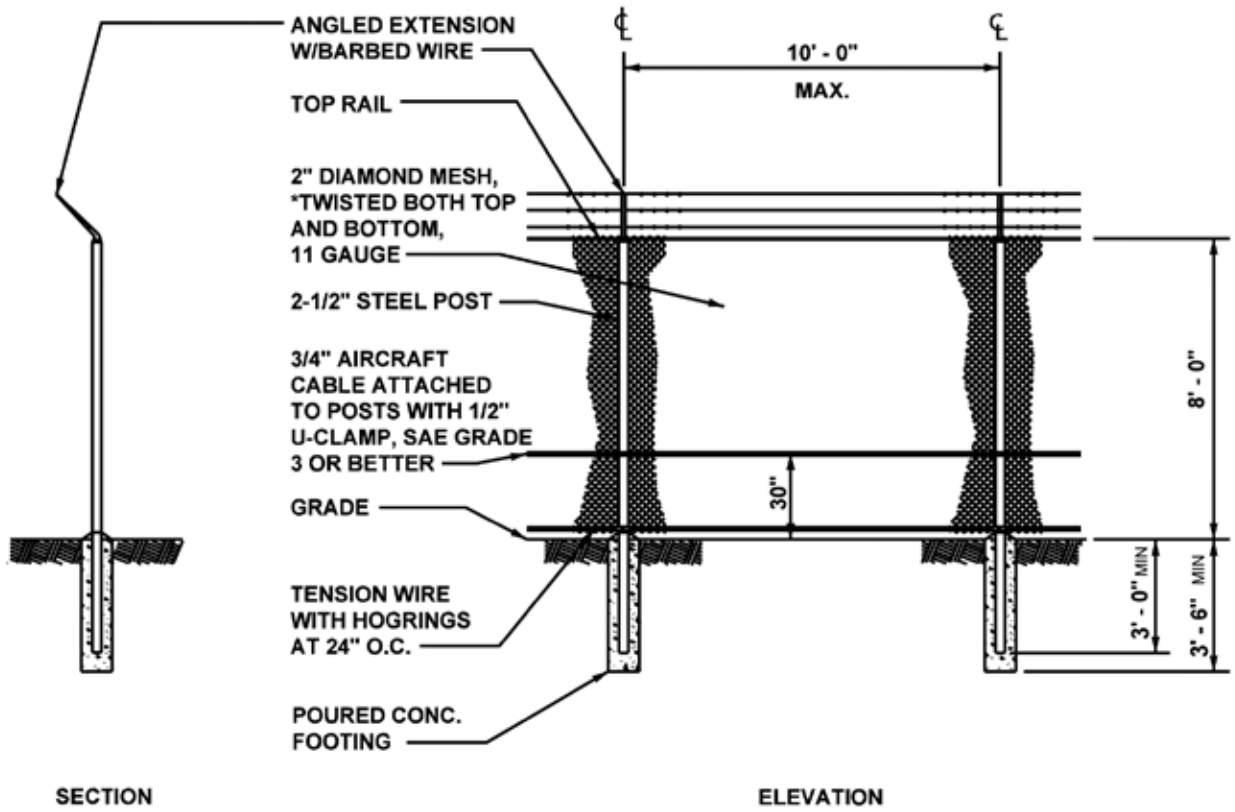

NOTE:

FENCE SHALL BE BLACK VINYL COATED IN AREAS VISIBLE TO THE PUBLIC.

A/E SHALL DESIGN POST FOOTINGS.

3' x 3' x 3' CONCRETE DEADMAN TO BE USED WHEN HORIZONTAL ALIGNMENT OF THE FENCE CHANGES 15 DEGREES OR MORE AND AT CORNER SEND POINTS OF FENCE TO SECURE 3/4" AIRCRAFT CABLE.

AOA Chain Link Fence Exhibit III-5-3

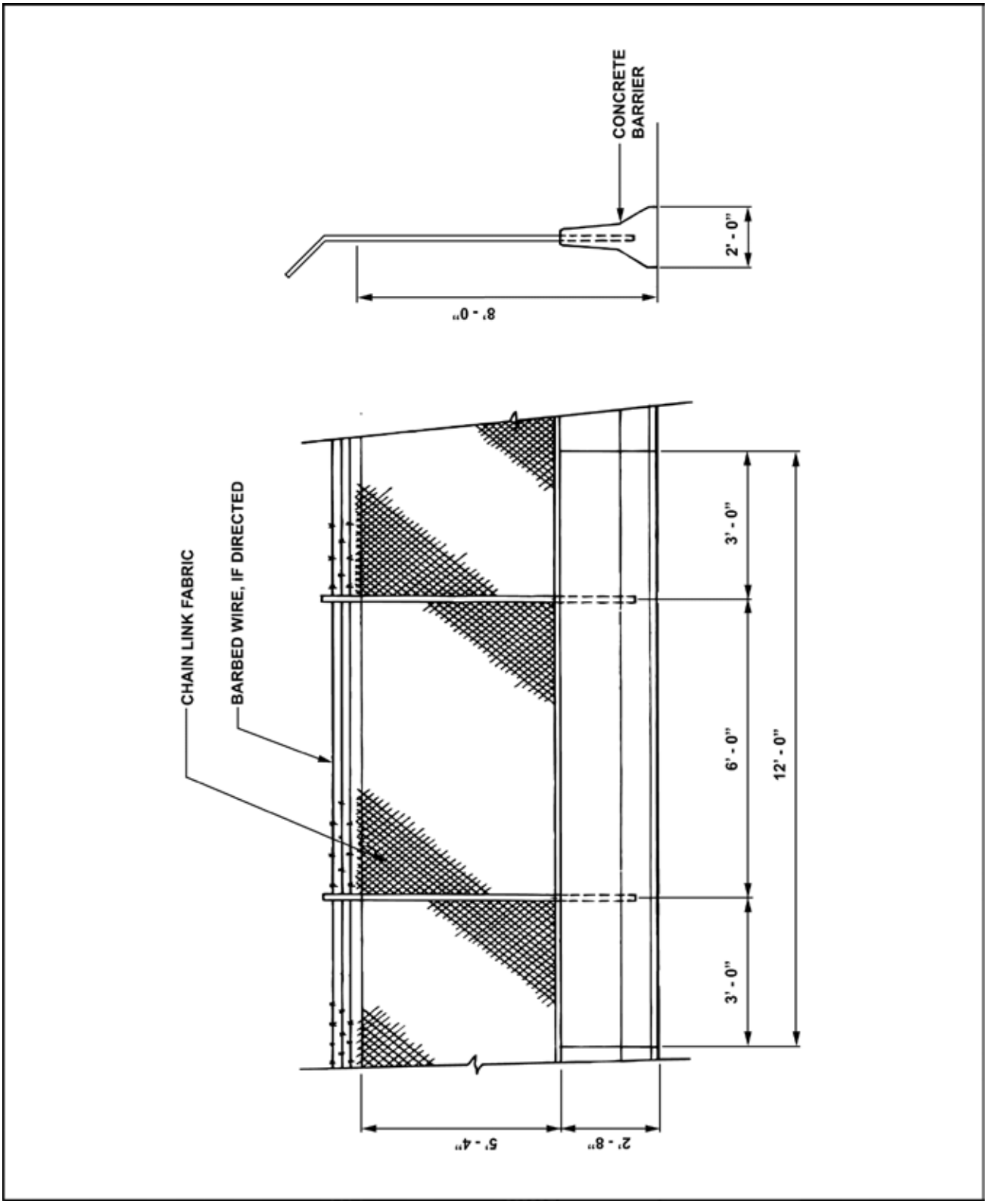

AOA Chain Link Fence on Jersey Barrier Exhibit III-5-4

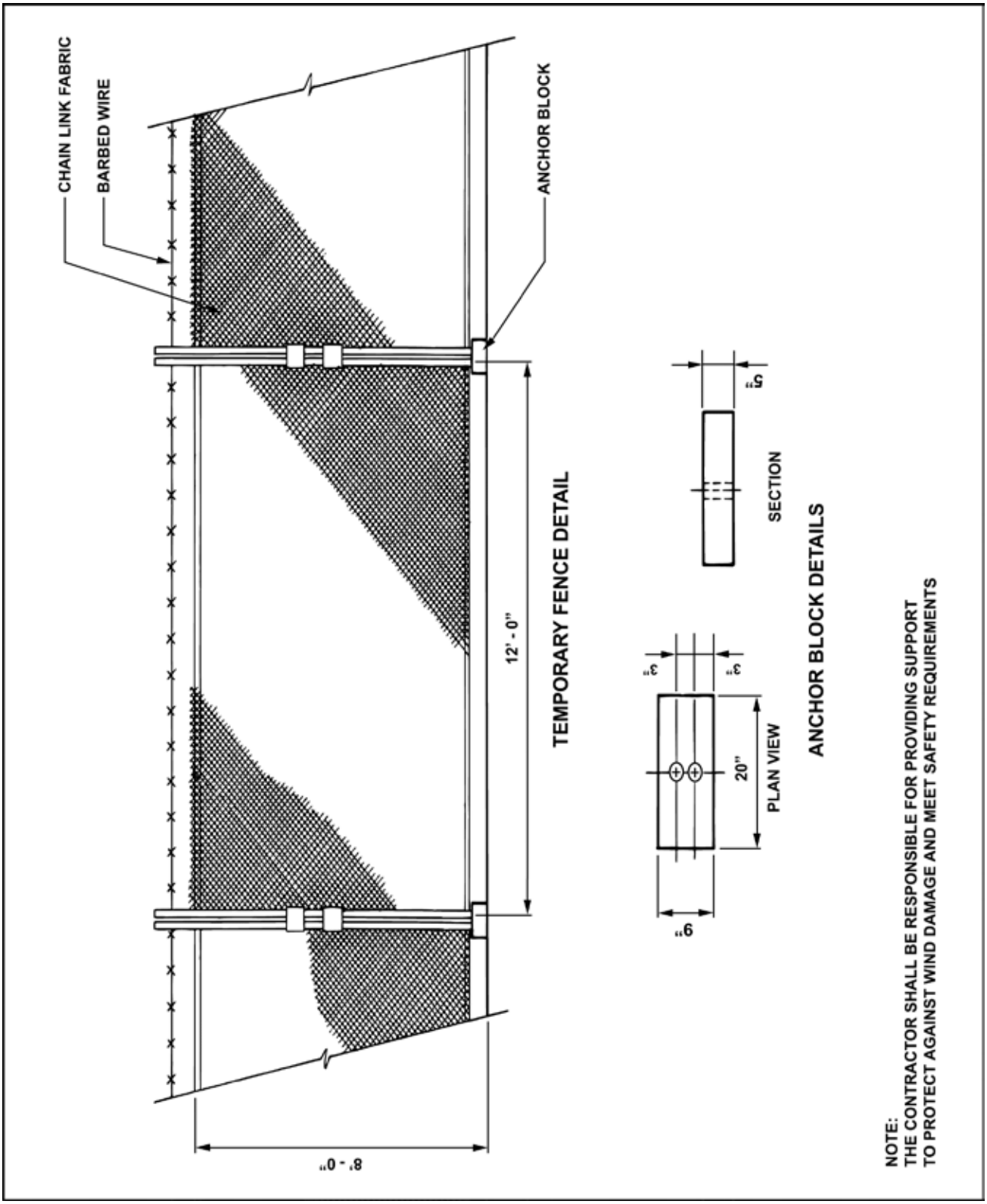

Temporary Fence Detail Exhibit III-5-5

5.5 Fire Apparatus Access Roads/Fire Lanes

5.5.1 General: Unobstructed access to fire protection system connections and equipment shall be provided at all facilities on the airport property, regardless of the facilty ownership or lease/tenancy arrangements. This requirement applies to all AOA and non-AOA facilities, structures, service areas and consruction sites.

5.5.2 Emergency Vehicle Access Roadways: Emergency vehicle access roadways shall be designed as specified in the Virginia Statewide Fire Prevention Code and have an un-obstructed vertical clearance of not less than 16'-6" along the entire length of any roadway. Warning signs and striping shall be installed for adequate visibility. Striping shall be a reflective red color on the AOA and reflective yellow in all other areas. Striping shall be 6" wide and have 3' spacing between the stripes. Typical signage will be reflective with red lettering and white background. Clearances required for fire lanes, fire hydrants, fire department connections etc., shall be determined by the Authority Fire Marshal. Coordination with the Authority Fire Marshal is required during the facility planning and design stage. Fire apparatus access roads/fire lanes shall be included in design drawings. Where construction or other related activities will temporarily or permanently obstruct an existing emergency vehicle access, an alternative access, reviewed and approved in writing by the Authority Fire Marshal, must be provided prior to the time of obstruction.

5.6 Storm Drainage

5.6.1 General: Storm drainage systems on the AOA shall be developed utilizing the latest FAA Advisory Circular as guidance. OSHA confined space requirements shall be incorporated into the design of storm drainage structures. Storm drainage on landside shall be developed utilizing the Virginia Department of Transportation (VDOT) Drainage Manual as guidance.

5.6.2 Storm Drain Pipe Size: Storm drainage lines shall be designed and sized to meet hydraulic requirements, except that the minimum pipe size shall be 12" diameter from the first and highest storm drain structure in any branch. Smaller steel, cast iron, and PVC storm drain lines may be used from leaders and downspouts, small yard drains, and other such minor feeds. HDPE pipe may be used and shall have at least 12" of cover from the finish subgrade elevation.

5.6.3 Storm Drain Pipe Material: Storm drainpipes and culverts shall be Reinforced Concrete Pipe (RCP) may be High Density Polyethylene (HDPE) pipe. As a minimum RCP pipes shall be Class III per ASTM C76 with a compressive concrete strength of 4000 psi when tested per ASTM C39. HDPE pipe shall have an annular corrugated exterior with a smooth inner wall and a Manning's "n" rating of 0.012. The HDPE pipe shall meet the requirements of type-S pipe under AASHTO M294. Installation of HDPE pipe shall conform to ASTM D2321 and AASHTO Section 30 for highway applications. The design A/E shall evaluate the two pipes and recommend the pipe that best suits the project conditions. The A/E shall provide a written evaluation of the pipe material chosen and shall consider the costs of all materials required for proper installation of the pipe of it's intended service life.

5.6.4 Joints: The use of field applied bituminous as a joint sealing method for RCP is prohibited. Joints for HDPE pipe can be one of the following types: soil tight, silt tight, and water tight. The A/E shall determine the appropriate joint type and coupling based upon application of site conditions.

5.6.5 Video Inspection: All storm pipes and structures shall be cleaned and flushed and visually inspected. All new storm piping smaller than 12" diameter and all storm piping of any size that will be beneath buildings, site structures, or aircraft pavements shall be videotaped after flushing and prior to turnover to the Authority. Test reports and videotapes shall be submitted to the COTR. The A/E shall consider and recommend videotaping of any storm piping 12" and larger if special conditions exist that may dictate such testing. The scope of all videotaping requirements shall be clearly stated in the Contract Documents.

5.6.6 Trench Drains: See **Exhibit III-5-6** for details.

.

5.7 Water Mains

5.7.1 General: Water main pipes for sizes 3" and larger shall be cement-lined ductile iron. Water main pipes for sizes smaller than 3" shall be Type “K” copper tubing. The latest Specification Section Site Water Utility Distribution Piping issued by the Authority shall be used for all water main work.

5.7.2 Taps: “Hot”, “wet”, "saddle", or "service" taps are not permitted in the water mains supplying potable and non-potable water at both Ronald Reagan Washington National Airport and Washington Dulles International Airport, unless otherwise directed in writing by the Authority. Only Tees are permitted.

5.7.3 Internal Pressure: Where applicable, the A/E is responsible to design bearing thrust blocks and/or restrained joints to restrain forces due to internal pressure at fittings, valves, and at dead ends.

5.7.4 Flushing and Disinfecting: Flushing and disinfecting of water mains shall comply with the requirements of AWWA C651, the Virginia Department of Health Waterworks Regulation, NFPA-24, and the Authority provided specification Section 331116. Water mains at Washington Dulles International Airport, serving a combined fire/domestic water system, shall also meet the requirements of Section III, Paragraph 15.3.

5.7.5 Ductile Iron Water Main Pipes: Ductile iron water main pipes shall meet the following requirements:

5.7.5.1 Pipes: Centrifugally cast per ANSI/AWWA C151/A21.51.

5.7.5.2 Joints: Push-on or mechanical joints shall be per ANSI/AWAA C111/A21.11. Straight lengths of pipe shall use push-on joints only. Pipe fittings shall use mechanical joints.

5.7.5.3 Minimum Wall Thickness: Class 52 in accordance with ANSI/AWWA C150/A21.50.

5.7.5.4 Connections: Standard thickness in accordance with ANSI/AWWA C104/A21.4.

5.7.5.5 Water Mains: Connections to water mains shall be provided with tees using mechanical joints.

5.7.6 Copper Water Main Tubing: Copper water main tubing shall meet the following requirements:

5.7.6.1 Tubing: Seamless copper tube per ASTM B 88, Type K.

5.7.6.2 Joints: Brazed with lead free silver alloy filler metal.

5.7.6.3 Union Coupling: Union coupling with brazed ends, flared joints, or compression fittings shall be used in joining copper tubing in underground applications as directed by the Authority.

5.7.6.4 Fittings: Cast copper alloy pressure fitting per ASME B16.18 or wrought copper and copper alloy pressure fitting per ASME B16.22.

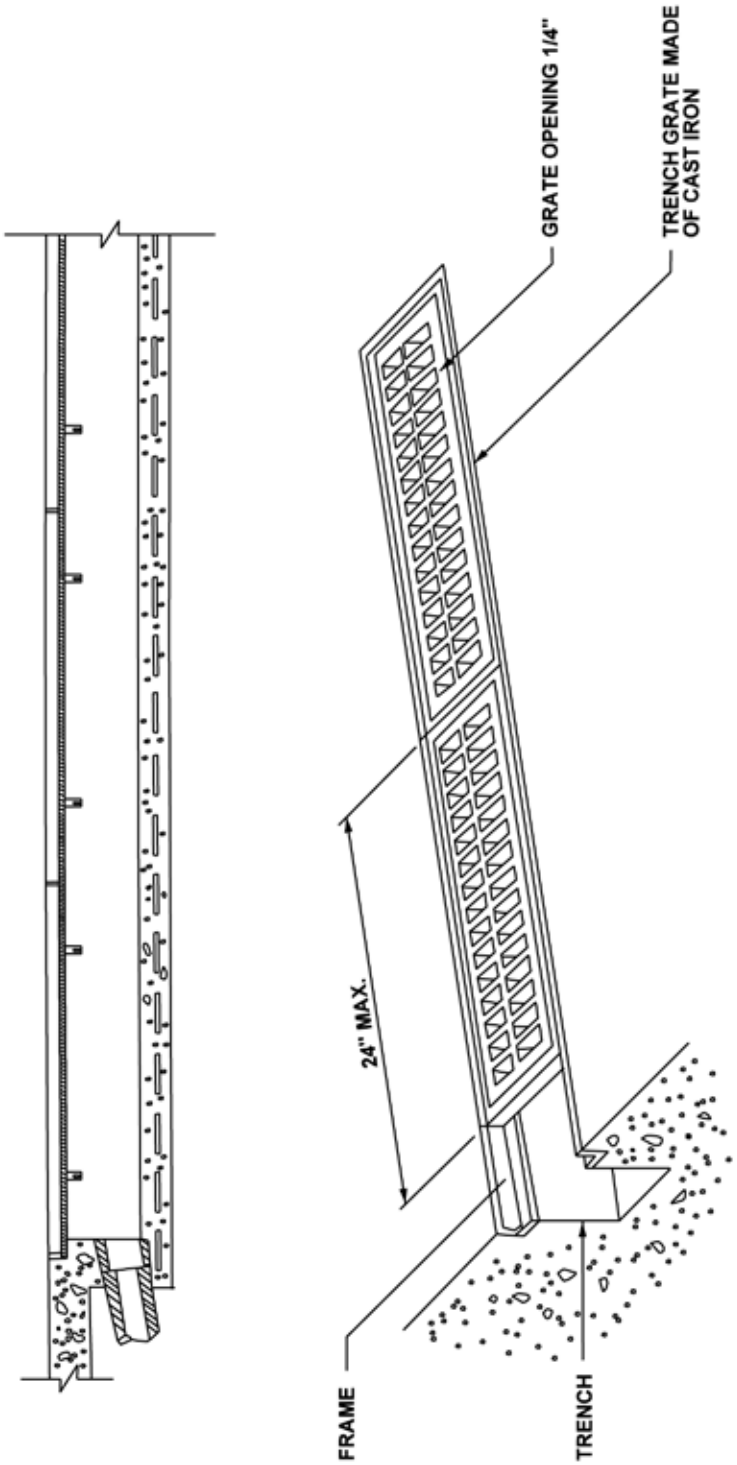

NOTE:

DESIGN TO SUPPORT ALL IMPOSED LOADS.

THE A/E SHALL PROVIDE DESIGN AND DETAILS FOR FRAME, GRATE AND STRUCTURE TO MEET THE LOADING AND DIMENSIONAL REQUIREMENTS FOR EACH STRUCTURE LOCATION.

Trench Drain Exhibit III-5-6

5.8 Sanitary Sewer

5.8.1 General: Refer to **Chapter 10, Piping Systems** of this Manual for piping requirements. All sanitary pipes and structures shall be cleaned, flushed, and where 6 inches diameter or larger, videotaped, prior to turnover to the Authority. Test reports and videotapes shall be submitted to the COTR. Refer to **Chapter 12, Plumbing** of this Manual for interior sanitary lift stations (Sewage Ejectors). Specification Section 333117, Site Sanitary Utility Sewage Piping issued by the Authority shall be used for all sanitary sewage work.

5.8.2 Sanitary Lift Stations (Exterior Applications): Sanitary lift stations shall meet the requirements of Virginia Department of Environmental Quality (VDEQ) Sewage Collection and Treatment (SCAT) Regulations. All lift stations are classified as VDEQ “Reliability Classification Number 1”.

5.8.2.1 Pumps: Sanitary lift stations shall be duplex submersible pump wet well type. Submersible sewage pumps shall be equipped with a quick disconnect system and an automatic alternator (select alternate pump each cycle). Each pump shall be capable of handling flows in excess of the expected maximum peak flow or a minimum of 2½ times the average design flow, whichever is greater. A peaking factor of 4 shall be used in establishing design peak flows. However, a peaking factor of 2.5 can be used in commercial areas separate from the terminal/concourses and in areas where the generated wastewater flow is not a function of the daily peaks in arriving and departing airline passengers. The wet-well shall be sized with a minimum 2-hour safety factor at full peak flow. The wet-well shall be installed with access hatches, minimum size 4' x 4' and a platform installed above the inlet pipe elevation to accommodate cleaning. The minimum size for access hatches may be reduced to 3' x 3' for a smaller pump station design, but requires prior written approval by the Authority no later than the 60% design submittal. Sewage pumps 2" and smaller shall be “grinder” type. Sewage pumps 3" and larger shall be “cutter” type. Where pump size is larger than the availability of the two noted types, “impeller” type pumps shall be provided. Sewage pumps shall also be provided with factory installed water sensors in the oil and stator chambers.

5.8.2.2 Power Requirements: Compliance with the VDEQ regulations concerning dual power sources shall be achieved by one of the following methods.

A. Provide power for the lift station from a facility which has redundant power sources and automatic transfer.

B. Provide two power feeds to the lift station, with an automatic transfer at the lift station. Power feeds must comply with VDEQ requirements.

C. Provide a single power feed to the lift station, and a standby generator with automatic transfer switch at the lift station.

5.8.2.3 Pump Controls: Level sensing controls for the pump shall utilize an ultrasonic level sensor - Siemens HydroRanger 200 or approved equal. In addition, a backup float system consisting of a high level alarm float, a high level "pumps on" float and a low level "pumps off" float shall be provided. The high level "pumps on" and low level "pumps off" floats shall start and stop both pumps in case of failure of the ultrasonic sensor. Plans shall indicate the setpoints for the ultrasonic level sensor and the floats. Lift station control panel enclosures shall be rated NEMA 4 when the panels are located in an outdoor environment. The control panel shall be UL listed.

5.8.2.4 Pump Alarm System: Provide alarms in accordance with **Exhibit III-5-7**. Provide individual indication of each alarm listed by means of individual indicator lights. For control panels exposed to the weather, indicator lights shall be inside the control panel. For control panels not exposed to the weather, indicator lights shall be visible from outside the panel. In addition, provide an exterior alarm with rechargeable battery backup power, flashing indicator light and horn, and silence button.

Alarm	Req'd by SCAT	Stops and locks out pump	Local Alarm at Control Panel		Signal to EMCS			Notes
			Indicator Light	Exterior Alarm	Critical	Maint	Info	
Hi Level	X		X	X	X			From float and ultrasonic sensor. Either one activates alarm. Alarm level minimum 2" below inlet pipe.
Power Failure	X		X	X	X			Detect loss of control power.
Ultrasonic Level Sensor Failure			X	X		X		
Cabinet Tamper			X				X	
Pump 1 No Flow	X	X	X			X		Signal from undercurrent relay, motor load relay, check valve limit switch, or other approved means.
Pump 1 Seal Failure		X	X			X		Only used if furnished with pump.
Pump 1 Overload		X	X			X		From contact in starter.
Pump 1 Over Temperature		X	X			X		Only used if furnished with pump.
Pump 2 No Flow	X	X	X			X		Signal from undercurrent relay, motor load relay, check valve limit switch, or other approved means.
Pump 2 Seal Failure		X	X			X		Only used if furnished with pump.
Pump 2 Overload		X	X			X		From contact in starter.
Pump 2 Over Temperature		X	X			X		Only used if furnished with pump.
Alarms below are only applicable to systems with a generator. Indicator lights may be on the pump control panel or on a separate generator panel.								
Generator Trouble	X		X		X			
Generator Running	X						X	
Generator Low Fuel	X		X		X			Does not apply to natural gas fueled generator.
Generator Not in "Auto"	X				X			
Generator Pre High Temp			X		X			
Normal Power Available			X				X	

Sump Pump Alarms **Exhibit III-5-7**

5.8.2.5 Alarm Connections to EMCS: Provide alarm connections to the EMCS in accordance with **Exhibit III-5-7**. Pump control panels shall provide isolated dry contacts for this function. Contact arrangement shall be designed so as to not provide false alarm indications upon power loss. Where there is an EMCS panel nearby, alarm signal control wiring shall be provided between the pump control panel and the EMCS panel. Where an EMCS panel is not nearby, one shall be provided as part of the lift station. Note that the EMCS panel will require 120V power, communications line, and a weatherproof enclosure. Coordinate with Siemens (EMCS vendor) to determine the appropriate means to interface the lift station to the EMCS. All work required by Siemens to connect their equipment and display the alarms at the West Utility Building, shall be covered in the contract documents. If the project includes EMCS work other than for lift stations, the alarm points listed above shall be added to the list of I/O points for the EMCS. If the only EMCS related work in the project is the EMCS work required for the lift station, then an EMCS I/O points list shall be created and shown on the drawings which show the lift station controls.

5.9 Dust Control

5.9.1 General: The A/E shall include provisions in the technical specifications to require the construction contractor to provide effective dust control measures in the working area throughout the entire construction period. Use of calcium chloride is not permitted.

5.10 Utility Structures

5.10.1 General: Loading design criteria for manhole frames and covers required for access to underground utility systems shall be determined by installation location and anticipated use

5.10.2 Manhole Openings: Round manhole covers and frames shall have a minimum diameter at the throat of frame as indicated in the following chart consistent with the utility system being accessed. Rectangular manhole covers and frames may be specified provided the smallest side of the square throat of frame is equal to or greater than the dimensions indicated in the following chart consistent with the utility system being accessed. Rectangular manhole covers shall be equipped with spring assisted hinge mechanisms.

Utility System	Ronald Regan Washington National Airport	Washington Dulles International Airport
Storm	30 inches	36 inches
Sanitary	30 inches	36 inches
Fire Main/DFS	36 inches	36 inches
Telecomm	36 inches	36 inches
Electrical	36 inches	36 inches

Manhole or access openings for other utilities shall be as directed by the Authority.

5.10.3 Landside Civil Design Standards:

5.10.3.1 Standard Inlet Frame and Cover: Shall conform to VDOT Road and Bridge Standard Detail No. IC-2 (Detail Drawing 105.01) with the exception of the lettering on the covers, which shall conform to the standard shown in **Exhibit III-5-8.**

5.10.3.2 Manhole Frames and Covers: Shall conform to VDOT Road and Bridge Standard, Details No. MH-1 and MH-1A (Detail Drawings 106.02 through 106.06), with the following exceptions:

A. Minimum clearance for access (minimum diameter at throat of frame) shall be in accordance with *Design Manual*, **Paragraph 5.10.2**, with a cover to fit accordingly.

B. Lettering on covers shall conform to the standard shown in **Exhibit III-5-8**.

C. Cover and frame shall be designed for the loading requirements of the manhole location.

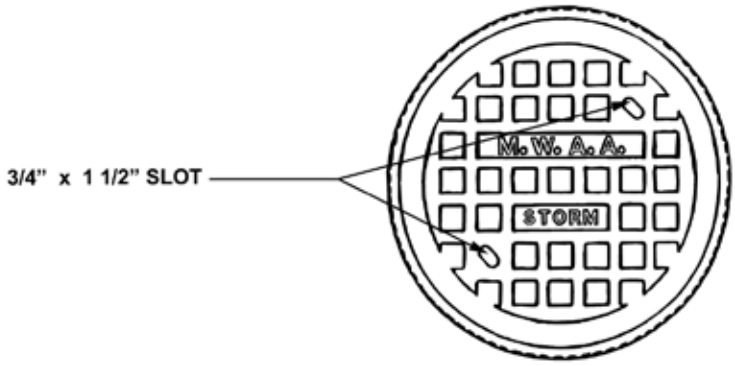

UTILITY IDENTIFICATION

STORM	STORM DRAIN/SEWER
COMM.	TELEPHONE AND COMMUNICATIONS
SAN.S.	SANITARY SEWER
GAS	GAS
FUEL	FUEL OIL/GASOLINE/AIRCRAFT FUEL
ELEC.	ELECTRICAL
WATER	WATER
DFS	DEDICATED FIRE WATER SYSTEM

NOTE:
THE A/E SHALL PROVIDE DESIGN AND DETAILS FOR FRAME AND COVER TO MEET THE LOADING REQUIREMENTS AT THE MANHOLE LOCATION.

CAST IRON/DUCTILE IRON: THE LETTERS ARE TO BE CAST INTO THE DEPRESSION IN THE TOP OF THE COVER, 3 INCH LETTER-HEIGHT AND RAISED 1/4 INCH HIGH TO BE EVEN WITH THE TOP SURFACE OF THE COVER.

STEEL: THE LETTERS ARE TO BE WELDED INTO THE DEPRESSION IN THE TOP OF THE COVER, 3 INCH LETTER HEIGHT AND WELD RAISED 1/4 INCH HIGH.

Standard Man Hole Cover Exhibit III-5-8

5.10.3.3 Drop Inlets: Drop inlets shall conform to **Exhibits III-5-9 and III-5-10**.

5.10.3.4 Manhole: Manhole steps shall conform to **Exhibit III-5-11.**

5.10.4 Airside Civil Design Standards:

5.10.4.1 General: All airside civil design shall follow the requirements of the FAA Advisory Circulars and Regulations. In addition, the criteria standards set forth below shall be incorporated in the design. See **Exhibits III-5-12 and III-5-13.**

5.10.4.2 Frames, Covers and Grates in the Aircraft Traffic Areas: A/E shall ensure that each frame and cover or grate unit installed in an aircraft traffic area will have fastening members to prevent it from being dislodged by traffic but that will allow easy removal for access to structure. Provide this requirement in each technical section of the specifications that specify frames & covers and grate units.

5.10.4.3 Frames, Covers and Grates in Non-Aircraft Traffic Areas: See Landside Civil Design Standards.

5.10.4.4 Location of Manhole Opening with Respect to the Structural Wall: The manhole opening shall be offset 7" from the inside surface of the structural wall containing the manhole steps. This offset equals the dimension that the manhole step protrudes from the wall see **Exhibit III-5-12.**

5.10.4.5 Location of the Top Step: The location of the top step in the manhole shall be based on the following standards

A. If the manhole top slab thickness is 20" or less, the following criteria shall apply:

1) The maximum depth from the surface to the first step shall be 24½" and the minimum spacing between the first step and the bottom surface of the top slab shall be 4½" see **Exhibit III-5-12.**

B. If the manhole top slab thickness is greater than 20", the following criteria shall apply:

The step shall be located 4½" below the bottom surface of the top slab and a recessed handhold shall be provided within the top slab see **Exhibit III-5-13.**

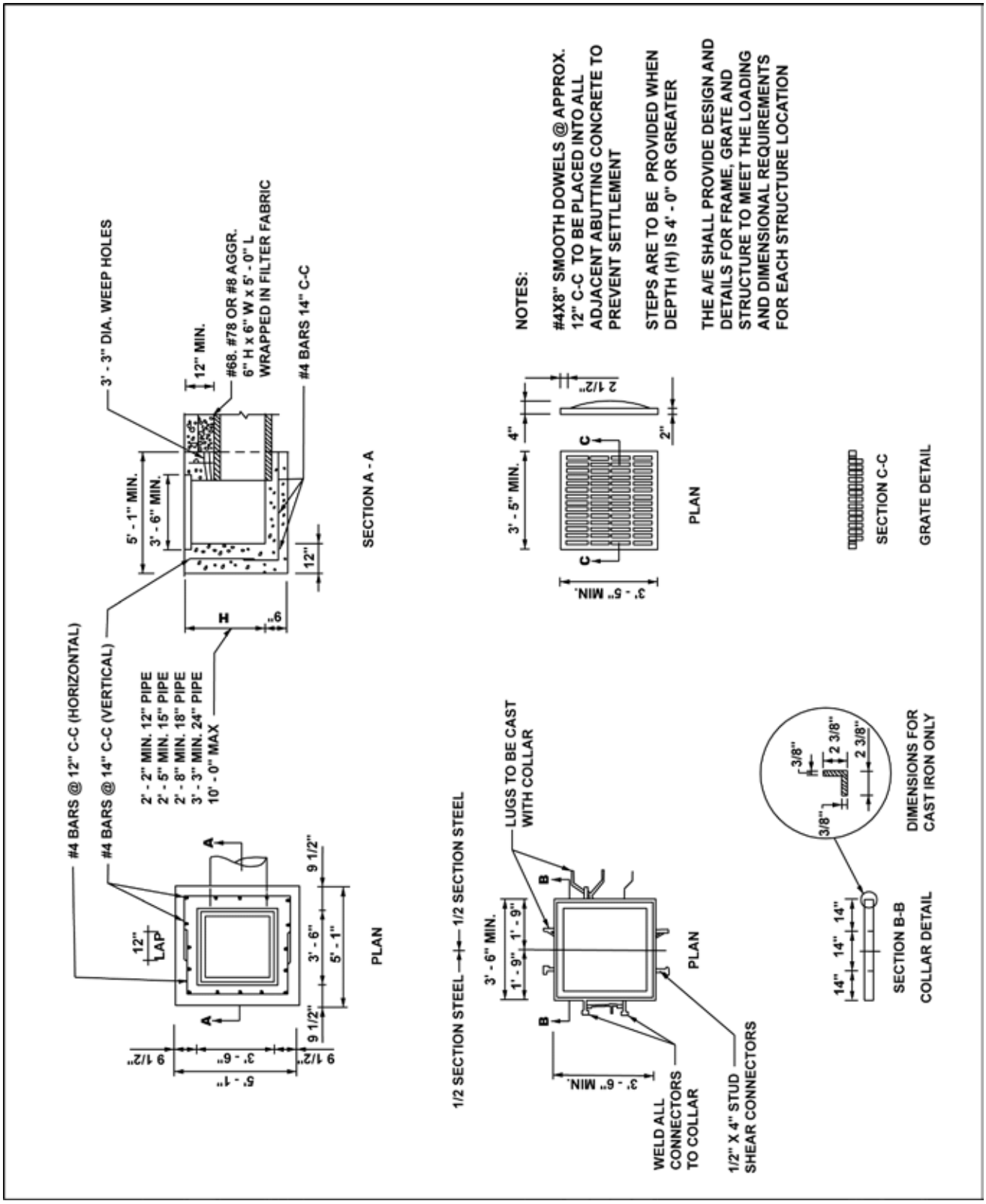

Standard Drop Inlet 12-24 in Pipe Max Depth (H)=10 ft **Exhibit III-5-9**

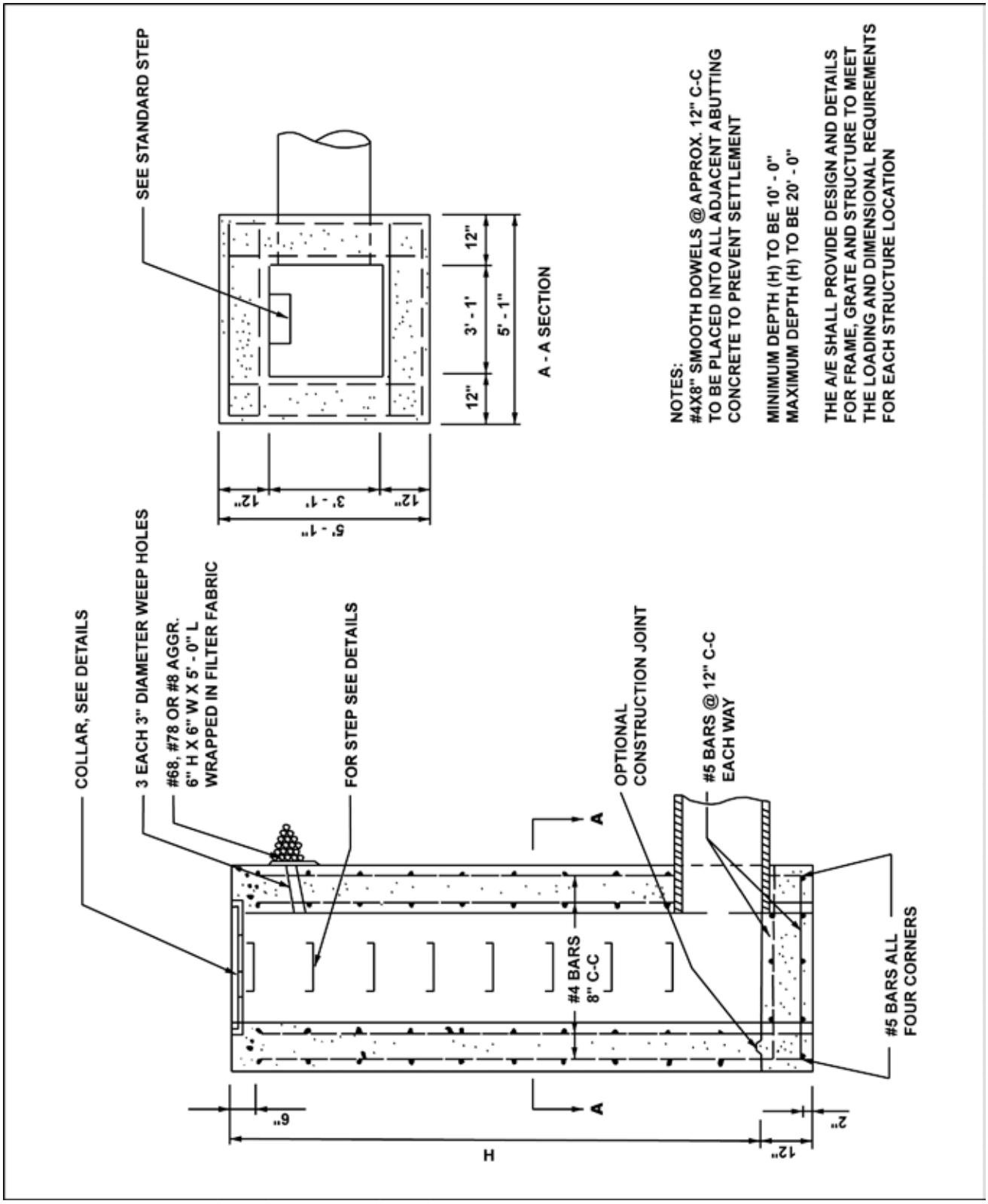

Standard Drop Inlet 12-24 in Pipe Max Depth (H)=10 to 20 ft Exhibit III-5-10

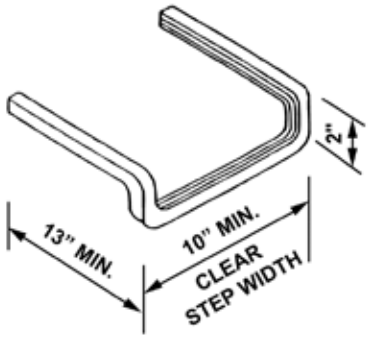

ALUMINUM STEP

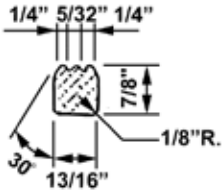

ALUMINUM STEP
TYPICAL SECTION

ALUMINUM STEP
SECTION

NOTES FOR ALUMINUM STEP:
STEP SHALL BE FABRICATED IN ACCORDANCE WITH ASTM B221, ALLOY 6006-T5

THAT PORTION OF STEP ENCASED IN MASONRY SHALL BE UNIFORMLY COATED WITH BITUMINOUS, SOLVENT TYPE, FILLED ALUM. PIGMENTED COATING CONFORMING TO FED. SPEC. TC-C-0049BA

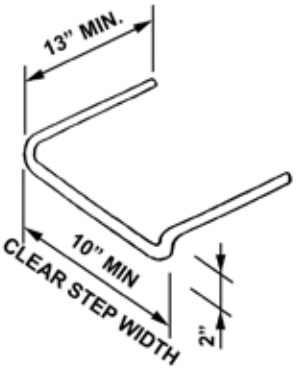

NO. 6 GALVANIZED STEP

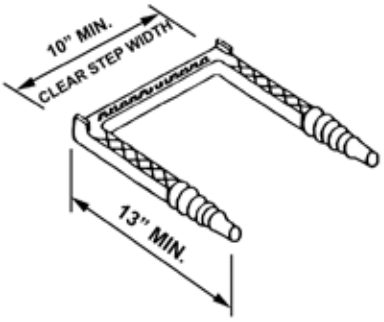

NO. 3 REINF. BAR ENCASED IN A CORROSION-RESISTANT RUBBER SHEATH OR OTHER MATERIAL APPROVED BY THE COTR

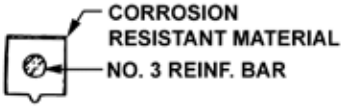

NO. 3 REINF. BAR
TYPICAL SECTION
(DIM. MAY VARY WITH MANUFACTURE'S DESIGN)

NOTE:
STEPS ARE REQUIRED IN ALL STRUCTURES WITH A DEPTH OF 4 FT. OR GREATER

ALL STEPS SHALL PROTRUDE 7 INCHES CLEAR FROM INSIDE FACE OF STRUCTURAL WALL

ALL STEPS SHALL BE VERTICALLY ALIGNED AND SPACED AT 12" TO 14" CC FOR ENTIRE DEPTH OF STRUCTURE

STEPS SHALL WITHSTAND A MIN. LOAD OF 300 POUNDS WHEN APPLIED 7 INCHES FROM THE FACE OF SUPPORT

PRECAST OR POURED IN-PLACE WALLS LESS THAN 8" THICK WILL REQUIRE A SHORTER EMBEDMENT DEPTH, BUT SHALL MEET MINIMUM LOAD REQUIREMENTS

IN PRECAST STRUCTURES, STEPS MAY BE CAST-IN-PLACE OR MORTARED INTO HOLES PROVIDED BY THE FABRICATOR

STEPS DIFFERING IN DIMENSIONS, CONFIGURATION, OR MATERIALS FROM THOSE SHOWN MAY BE USED, PROVIDED THEY MEET THE MINIMUM REQUIREMENTS SHOWN HERE AND IF THEY HAVE BEEN APPROVED IN WRITING BY THE AUTHORITY

Standard Step Exhibit III-5-11

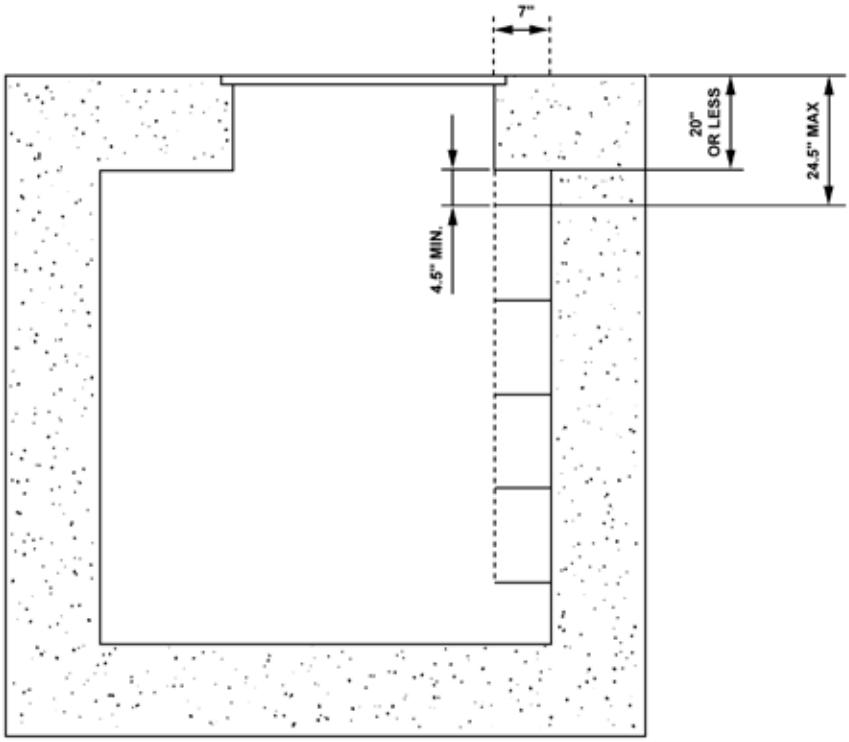

MANHOLE - SLAB THICKNESS 20" OR LESS

Design of Airfield Manholes Exhibit III-5-12

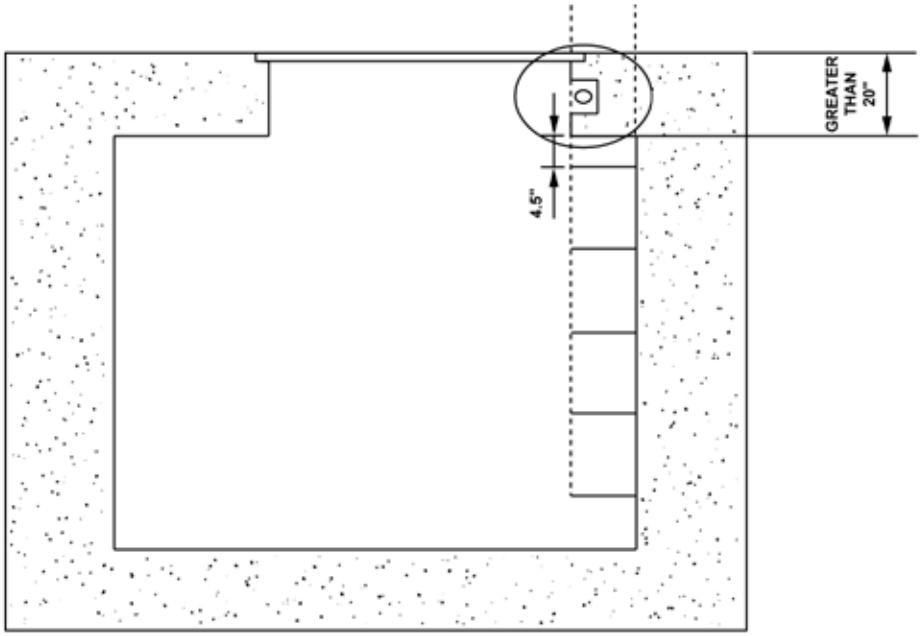

MANHOLE - SLAB THICKNESS GREATER THAN 20"

Design of Airfield Manholes Exhibit III-5-13

(This Page Blank)

CHAPTER 6 Landscaping

The A/E shall design all projects so that the work required in the Construction Documents incorporates all relevant requirements as set forth below.

6.1 Plant Installation

6.1.1 General: The design of the installation of plant materials shall conform to the current edition of Landscape Specifications Guidelines, issued by the Landscape Contractors Association of Maryland, D.C., and Virginia. The landscaping plan shall blend the natural size and function of the plantings with the architectural aspects of the surrounding buildings. Automatic irrigation systems should be included in the planning and design of large landscaping designs. At Ronald Reagan Washington National Airport, the design shall also be in accordance with the landscaping master plan developed for the Airport. The desired visual traits of the landscaping are to give a clean, orderly look to the arrangement. The landscaping should be scaled to the surroundings and shall provide seasonal interest.

6.2 Trees

6.2.1 General: Large trees should provide large-scale screening and shade from the westerly sun. Where planted adjacent to walkways, they should provide some overhead canopy for pedestrians. Medium sized trees should be compatible with the habits of the nearby large trees and provide multi-seasonal interest. Trees should be selected that provide no dropping large-scale fruits or berries that stain.

6.3 Shrubs

6.3.1 General: Shrubs should be selected that provide a natural buffer zone between the roadway or sidewalk and the buildings. The shrubs should provide multi-seasonal interest, may be flowering or fruit bearing, and provide interest between eye level and ground level.

6.4 Seeded Lawns

6.4.1 General: Seeded lawns should provide a year round green effect for large open areas. Lawns should be planted in accordance with the recommendations of the Landscape Specification Guidelines. Seed mixture should be coordinated with the Authority prior to specifying. Also refer to **Section III, Paragraph 4.12**.

6.5 Special Considerations

6.5.1 General: To ensure adequate sight distances at road intersections and driveways, the A/E shall select and locate the landscaping materials so that the plantings and trees shall not obstruct drivers' sight distance. Additionally, the plantings shall be maintained at a height to ensure that the driver visibility is not impeded and/or materials shall be chosen that will not require maintenance trimming.

(This Page Blank)

CHAPTER 7 Buildings

The A/E shall design all projects so that the work required in the Construction Documents incorporates all relevant requirements as set forth below.

7.1 Terminal Building Use and Construction Classification

7.1.1 General: According to USBC, terminal buildings are typically classified as Assembly Use Group A-3. However, terminals at both Ronald Reagan Washington National Airport and Washington Dulles International Airport have derived a further specialized use-group classification by virtue of added use characteristics, structural features and occupant safety provisions that exceed the minimum building code requirements in many instances.

7.1.2 Terminals: For design purposes, the terminals listed below are designated as Covered Mall Building with Type 2B Construction Classification per the USBC:

7.1.2.1 Ronald Reagan Washington National Airport

Terminal A	(Main Terminal)
Terminal B & C	(New North Terminal)

7.1.2.2 Washington Dulles International Airport

Main Terminal Building)	(Includes International Arrivals
Concourse A Concourse)	(Regional Airline Midfield
Concourse B	(New Midfield Concourse Facility)
Concourse C/D	(Midfield Concourse Facility)

7.2 Temporary Construction

7.2.1 General: In general, only permanent construction will be approved on Airports property. However, temporary construction may be required by the construction of new facilities or renovation of existing facilities by the Authority or Airport tenants. Such facilities shall be consistent with those aspects of the Design Manual that are reasonably achievable without financial burden, and subject to review and approval in writing by the Authority. A/Es of temporary facilities shall clearly identify all Design Manual requirements that will not be met by the temporary construction and must request written Authority approval to design to the lower standards of construction. Temporary facilities shall be permitted to remain in place for not more than six months, unless specifically tied to the construction period for permanent facilities.

7.3 Designated Smoking Areas

7.3.1 Ronald Reagan Washington National Airport and Washington Dulles International Airport operate as non-smoking facilities. As such, all facilities designed for the Airports shall include the necessary facilities (including designated smoking areas and rooms), signing, and equipment to properly implement this policy. The designated smoking areas shall be designed as follows:

7.3.2 Ventilation: Indoor smoking rooms shall be ventilated in accordance with The International Mechanical Code, Section III, Paragraph 11.2.4 of this Manual, and other applicable requirements.

7.3.3 Indoor Smoking Rooms: Shall be fully enclosed with self-closing doors and shall also comply with all Federal, State and other applicable regulatory requirements.

7.3.4 Ash Receptacles: Only approved fire resistive, metal ash receptacles shall be used. The Authority Fire Marshal shall approve the type of ash receptacle specified.

7.3.5 Furnishings: All furniture, carpeting, etc., shall comply with flame spread/smoke generation ratings specified by the USBC, SFPC and other applicable regulatory requirements.

7.3.6 Fire Extinguisher Locations: A 10 lb. ABC type fire extinguisher shall be located in each smoking room, or otherwise located in accordance with NFPA 10 standards.

7.3.7 Smoking Rooms: Smoking Rooms shall be protected throughout by a fire suppression system.

7.4 Exterior Surface and Public Area Colors

7.4.1 General: The color of all exterior and public area surfaces shall match the requirements, color and type, of the airport master scheme. Color samples shall be submitted to the Authority designated construction representative for necessary approval prior to the start of painting.

7.5 Thermal Transmittance

7.5.1 General: New construction or modifications affecting building exterior envelope component materials shall be planned, designed, and constructed in accordance with USBC for the overall thermal transmittance of a gross area of the exterior building envelope, such as walls, floors, or roofs/ceilings. Thermal transmittance values shall meet the requirements specified in the International Energy Conservation Code.

7.6 Wood and Wood-Veneer Products

7.6.1 Use of Wood Products: In passenger terminals and concourses, the use of wood and wood composition products shall be in accordance with applicable provisions of the latest edition of the USBC. The exception to the use of fire retardant-treated plywood is for structural applications, such as a roof deck. Additionally, fire retardant lumber shall not be ripped or milled.

7.6.2 Use of Wood Veneer Products: In passenger terminals and concourses, wood veneer products shall be constructed in accordance with applicable provisions of the USBC`. The Contractor shall provide a submittal documenting the fire classification of the product prior to construction.

7.7 Laminated Surfaces

7.7.1 General: In passenger terminals and concourses, cabinets, counter tops, and plastic laminated surfaces shall typically be constructed in accordance with applicable provisions of the USBC.

7.8 Roof System

7.8.1 General: Any new roofing or re-roofing system shall, unless otherwise directed in writing by the Authority, be a Fully Adhered System with a Thermoplastic Polyolefin's (TPOs) roofing membrane. Alternative systems may be submitted by the A/E to the Authority for consideration. The Insulation System shall be attached to the substrate as required by the membrane manufacturer to achieve the required Factory Mutual (FM) classification for the Fully Adhered System. Sheathing material shall be classified by Underwriter Laboratories, Inc., as a Class A material suitable for use in construction of a Class A roofing system. Roof membrane shall be white with a minimum thickness of 60 mils (0.060 inches). An alternative roof membrane color may be submitted by the A/E to the Authority for consideration. Details and location of all roof penetrations shall be shown on proposed drawings and submitted for approval. For re-roofing projects, all old roofing materials and insulation shall be removed. Roof systems shall be installed using tapered insulation, if necessary, and with roof surface slopes to roof drains with a slope of not less than ¼" per foot. Equipment that must be wired, piped, or otherwise serviced through the roof shall have all penetrations properly sealed to prevent leaks. Flexible walkways shall be installed on roof surfaces, leading to, from, and around all roof-mounted equipment utilizing either walking pads or walkway rolls. Walking pads shall be of chopped rubber composition, minimum 0.31" thick and 30" wide. A 2" spacing between pads is required. Walkway rolls shall be factory-formed, nonporous, heavy-duty, slip-resisting, heat weldable, and approximately 3/16" thick. The color of the flexible walkways shall be a variation of the roof membrane so as to make them easily distinguishable and readily identifiable from the membrane. All components of the roofing system shall be supplied by or acceptable to the roofing membrane manufacturer and be covered by a 15-year manufacturer's renewable warranty. The warranty

shall be a total roof system warranty covering all components and installation, including, but not necessarily limited to the roof membrane, walkways, insulation, attachments, flashing, counter-flashing, adhesives and sealants, recovery board, fastener plates and strips, hard rubber or metal edging, and termination bars.

7.8.2 Attachment of HVAC and Communications Equipment on Roof: A/E shall design attachment of HVAC and communications equipment to roofs considering wind uplift and means to prevent crushing of roof insulation where installed. See **Exhibits III-7-1** and **III-7-2** for general guidance on provision of roof attachment details.

7.9 Visual Screens

7.9.1 General: Visual screens shall be erected around all roof-mounted equipment installed or modified on permanent structures. For ground-mounted structures and temporary structures, the application of screens will be on a case-by-case basis depending upon type of building, location of structures, duration, etc. At Ronald Reagan Washington National Airport, color shall be neutral beige and round metal pipes shall be used as vertical supports for the screens. At Washington Dulles International Airport, the color shall be "Dulles Gray K-48," except for special situations. For Washington Dulles International Airport color information refer to **Exhibit II-3-19 "Color Chart" in IAD Vol. 1.**

7.10 Floor Coverings

7.10.1 General: In passenger terminals and concourses, all floor coverings, including carpet, shall meet the applicable provisions of the Virginia Uniform Statewide Building Code. A certified document of test data compliance from a testing laboratory shall be furnished to the Authority designated construction representative for approval prior to installation.

7.11 Wall Systems

7.11.1 General: Wall shall be of noncombustible materials, such as metal studs, channels, caps, and bracing. Wood framing is not acceptable. Fire resistance rating shall be as required by USBC.

7.11.2 Wall Framing: Metal studs shall be securely affixed on both sides at the top and bottom, installed in accordance with manufacturer's recommendations for framing of openings, spacing, heights, and gauges.

7.11.2.1 Exterior Walls: All exterior wall studs shall be galvanized and shall be a minimum of 18 gauge up to 10' in length and 16 gauge for lengths greater than 10'. All field welds shall be coated with two coats of galvanizing paint. Double 18 gauge studs shall be installed on each side of all door openings and areas that will support signs, cabinets, shelves, etc.

7.11.2.2 Interior Walls: All interior wall studs shall be a minimum of 20 gauge. Stud depth shall be determined by bearing requirements and stud length. Double 18 gauge studs shall be installed on each side of all door openings and areas that will support signs, cabinets, shelves, etc.

7.11.2.3 Metal Stud Splicing: Maximum unsupported length of metal studs at fire rated walls shall be 20 feet.

7.11.3 Partition Requirements: All gypsum board shall have a minimum thickness of ⅝". Fire resistance rating shall be as required by VCC. At Washington Dulles International Airport, in facilities neither operated nor maintained by the Authority, including buildings at 44969 – 45045 Aviation Drive, ½" thick gypsum board may be used except in demising walls in wall partitions.

7.11.3.1 Wallboard Moisture Management: It is important to evaluate all moisture sensitive areas for wallboard installation and finish application. Special consideration should be given to: non-ducted air shafts, all walls encompassing or within toilet rooms and exterior walls in the below grade portions of buildings.

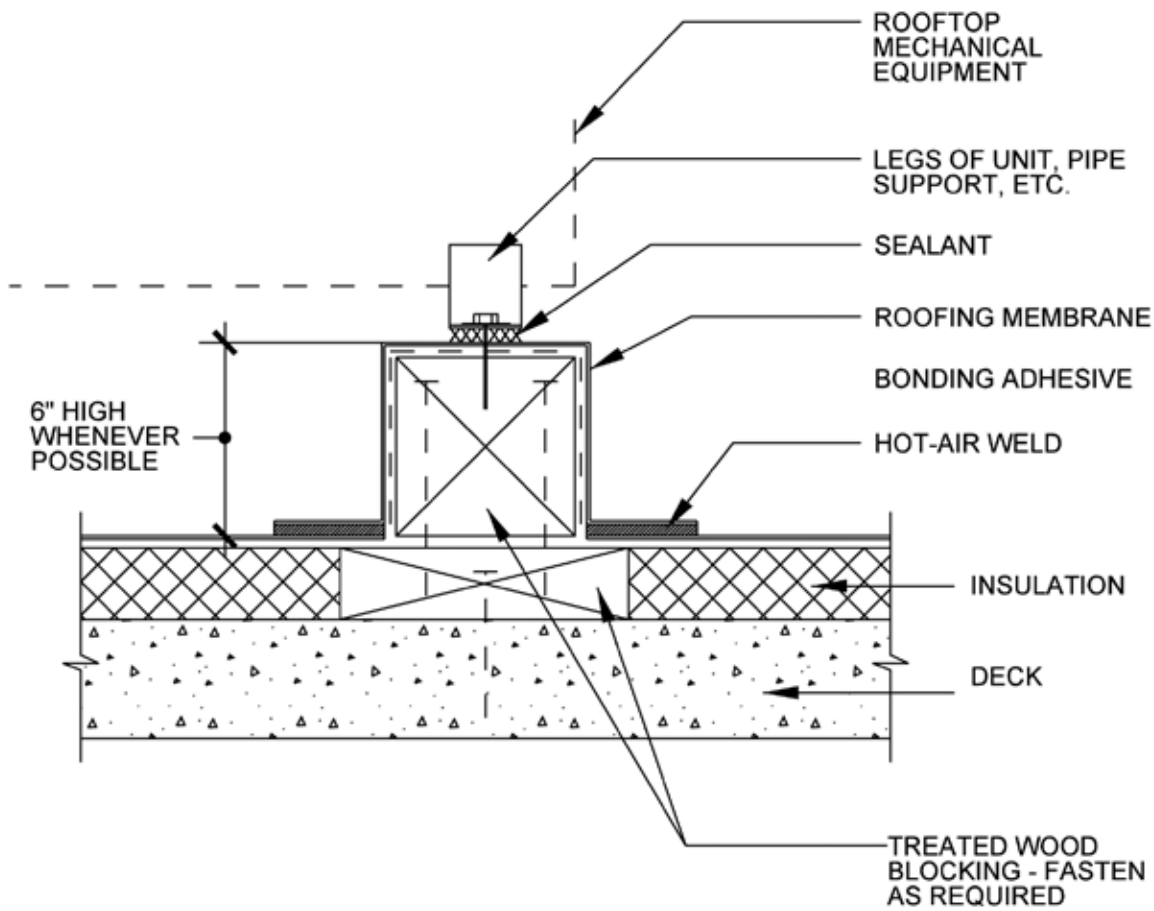

Fixed Sleeper Detail Exhibit III-7-1

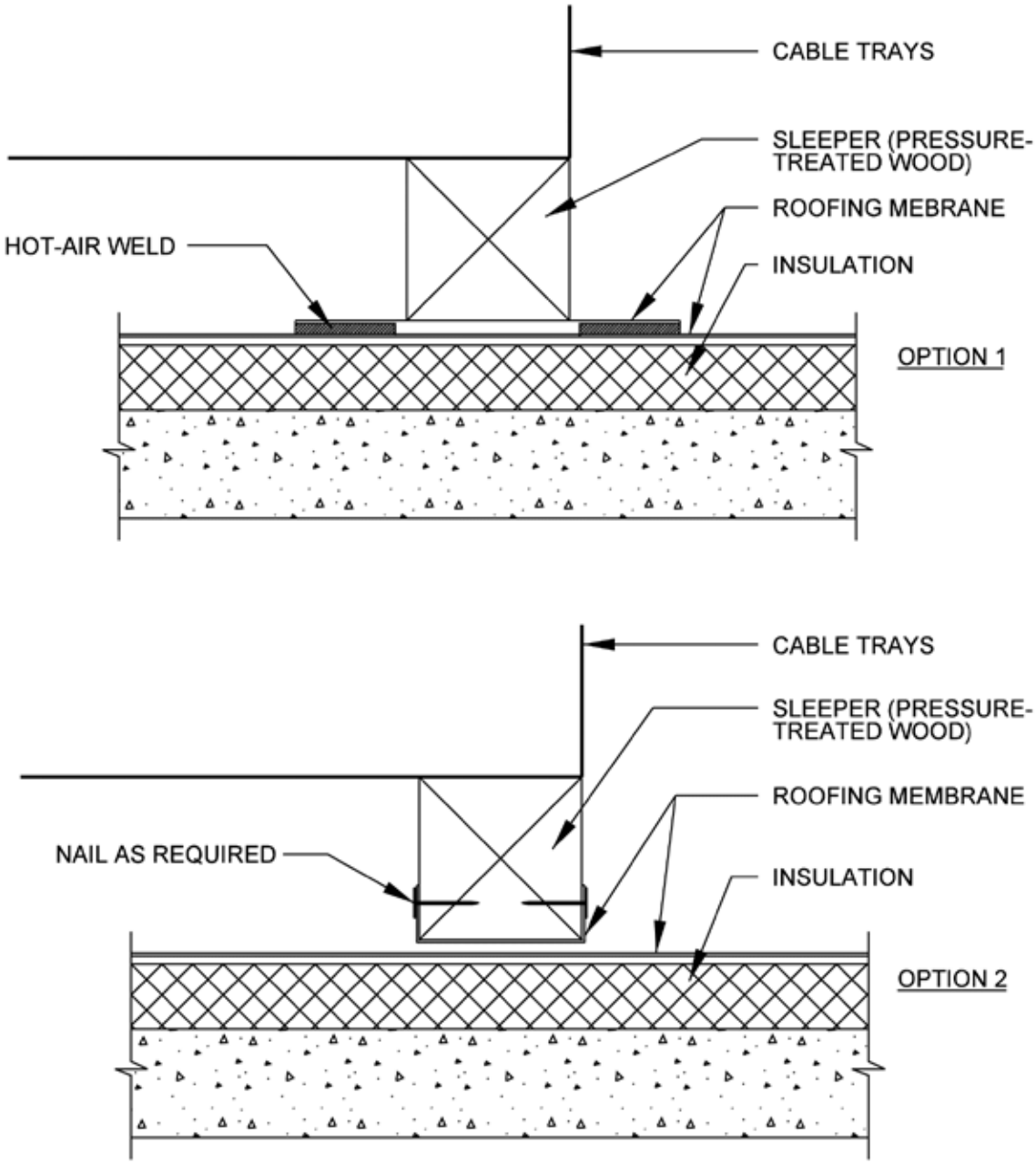

- INSULATION COMPRESSIVE STRENGTH MUST BE CONSIDERED PRIOR TO INSTALLATION OF FLOATING SLEEPER DETAIL TO ENSURE THAT THE INSULATION BOARD WILL NOT BE CRUSHED BY THE WEIGHT OF THE UNIT.

Floating Sleeper Detail Options Exhibit III-7-2

It is recommended these areas be constructed with cement core board or wallboard panels specifically designed as moisture, water resistant, and mold resistant with properties conforming to ASTM D3273.00. The wet walls of toilet rooms shall be provided with cement core board.

7.11.3.2 Wall Coverings: In passenger terminals and concourses, all wall coverings, shall meet the applicable provisions of the Virginia Uniform Statewide Building Code. A certified document of test data compliance from a testing laboratory shall be furnished to the Authority designated construction representative for approval prior to installation.

7.11.3.3 Paint, Fire Resistance, and Environmental Requirements: All paint shall meet the requirements of the National Fire Protection Associated (NFPA) Code and Standards for the flame spread and smoke density. Paint processes shall meet environmental standards for ventilation as established by OSHA. All paints, solvents, rags, and other painting refuse shall be disposed of properly off of Authority property according to State and Federal environmental regulations. Evidence of such compliance shall be furnished to the Authority designated construction representative before painting begins.

7.12 Lock System

7.12.1 General: The A/E must design and specify a lock system that is keyed to the Airport master system. Locksets shall accept seven-pin patented MX8 keyway interchangeable cores manufactured by Stanley-Best Access Systems. During the period of construction, locks shall be equipped with construction cores to assure the Contractor and designated Authority personnel access to work sites. The construction core will be operated by the Grandmaster and designated construction key, the core mark and keyway will be assigned by the Authority Locksmith. The Contractor shall furnish combinated key cores to the Authority. After construction work is complete, the Authority Locksmith shall remove the construction cores, and install an airport master-keyed lock core. All requests for additional keys shall be processed through the Airport Engineering & Maintenance Department. Design documents shall indicate that the Authority Locksmith's services will be charged to contractors. These charges shall be in accordance with Metropolitan Washington Airports Order and Instructions IAD 10-0-2C, "Key Control at Washington Dulles International Airport" and DCA 10-0-2B, "Locking of Spaces –for Ronald Reagan Washington National Airport."

7.13 Exit Doors

7.13.1 Egress Doors: Egress doors shall comply with exit requirements of USBC and the ADA. This includes the direction of door swing, exit signage, emergency lights, and exit discharge. Refer to **Section III, Chapter 26**. Security for additional security requirements of AOA egress doors.

7.13.2 Automatic Entrance Doors: Powered automatic public entrance doors shall be provided with an interface with the EMCS to indicate the following:

Power failure
Door not open
Door not closed

7.14 Automated External Defibrillators

7.14.1 General: The placement/installation of Automated External Defibrillators (AED) cabinets/devices shall be approved by the Authority's Emergency Medical Services (EMS) Division during the design phase or prior to placement in existing buildings. General guidelines for placement/installation of AEDs includes public areas of facilities, such as the ticketing and baggage levels, concourses, and non-public employee inhabited working spaces, i.e., baggage makeup areas, concourse apron levels, office buildings, utility plants, etc. AEDs shall not be installed in non-public locations/facilities such as utility tunnels, ATS tunnels, exterior garage locations, etc.

7.14.2 Installation: All cabinets and associated devices shall be installed in accordance with the manufacturer's instructions. The cabinets are based on J.L. Industries

standard AED. The mounting height above the finished floor to the center of the cabinet door handle shall be 4' - 0".

7.14.3 Cabinet Monitoring Requirements: Cabinets located in public areas shall be monitored. Monitored cabinets shall be equipped with a door position switch and a key switch. The key switch shall serve to by pass the door position alarm during routine service. The key switch shall only allow the key to be removed in the "armed" position. Contact the COTR for the correct keying information. All key switches are to be keyed identically. When armed, opening the cabinet door shall activate the green strobe light and an alarm shall be transmitted to the Authority's Emergency Communication Center (ECC). Upon door closure the alarm shall be capable of being reset at the ECC. Cabinets located in non-public (employee inhabited working spaces) shall not be monitored.

7.14.4 Green Light Strobe: The local visual green strobe light shall be wall-mounted with the bottom of the strobe at a height above the finished floor of 80".

7.14.5 Cabinet Signage: All cabinets shall be provided with a wall-mounted blade sign. The signs shall have their tops at a mounting height below the finished ceilings of not less than 6" and the bottom not more than 96" above the finished floor. The blade sign shall be 10" high and 10" wide, double sided with flag mounted connections to the wall. The signage materials shall meet the requirements of the Design Manual. The sign graphics shall consist of the letters AED above the AED symbolize heart. Please refer to **Exhibit III-7-3**.

7.14.6 Additional Signage: Additional signage when required by the EMS Division shall be installed as directed.

7.14.7 Monitoring System: The AED monitoring system consists of distributed Siemens MXL-IQ panels (face painted purple) with field mounted TRI-R control modules connected via 16/2 shielded conductor for communication and a 14/2 shielded conductor for power using a common conduit or cable tray. Conduit and/or conductor in the cable tray shall be identified on 100' centers with purple markings. Inter-building connectivity between MSL-IQ panels is accomplished via fiber optic transceivers and ACS fibers.

7.15 Fire Control Rooms

7.15.1 Control Rooms: Fire Control rooms shall be provided at strategic locations throughout the airport. These rooms provide common space for fire/life safety system controls and panels. The location of these rooms shall be coordinated with the Fire/Rescue Department (FDR). Fire Control Rooms shall at a minimum be designed to include the following when applicable along with graphics and/or instructions for operation of the equipment.

7.15.2 Fire Detection: Fire detection/alarm system panels for the terminal buildings and attached APM Stations.

7.15.3 Smoke Evacuation: Smoke evacuation system controls/panels for the terminal buildings, attached APM stations and tunnel segments.

7.15.4 Water Mist System Manual Activation Panel (MAP): Manually activated fire suppression system controls for remote activation of water mist system zones.

7.15.5 Public Address Systems for Voice Evacuation: A pubic address system microphone station with capability of selecting public address zones individually, in any combination, or total building and have emergency override of all other announcements.

7.15.6 Water Mist System Control Panel (MSCP): Water mist system panel networked with all water mist systems at the APM Stations to the NCC-WAN, APM CCF and the Alternate CCF.

7.15.7 Emergency Fuel Shut-Off (EFSO): EFSO system panels.

7.15.8 Telephone System: Fire Department Telephone System.

7.15.9 CCTV: Monitor for viewing APM Station Cameras.

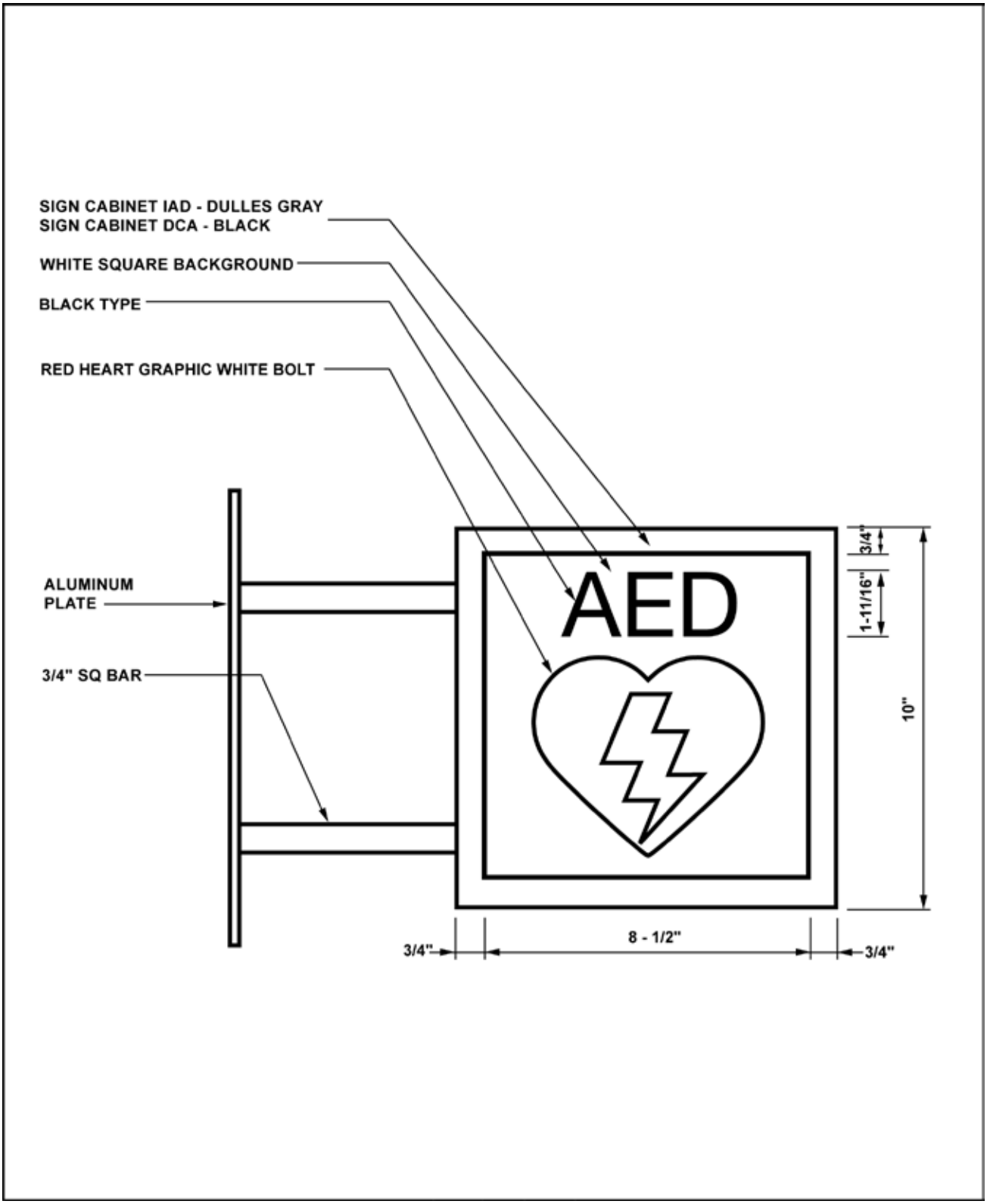

AED Exhibit III-7-3

7.16 Public Toilet Rooms

7.16.1 Toilet Partitions: Minimum toilet stall dimensions shall be 5' - 6" deep and 3' - 0" wide. In all toilet rooms, the layout, fixture types and amounts, and dimensions shall meet current code requirements and ADA requirements. The ADA required toilet stall dimensions shall be a minimum 4' - 8" deep x 5' - 0" wide for wall mounted water closets and 4' - 11" deep x 5' - 3" wide for floor mounted water closets. In public toilet rooms, toilet partitions including doors and hardware shall be made of type 304 stainless steel. Toilet partitions and doors shall be solid core and floor mounted.

7.16.2 Urinal Partitions: Each urinal utilized by the public or employees shall occupy a separate area with walls or partitions to provide privacy. The layout and dimensions shall meet current code requirements and ADA requirements. Urinal partitions shall be solid core wall mounted. Partitions and hardware shall be made of type 304 stainless steel.

7.16.2.1 Hand Dryer and Paper Towel Dispenser: In public toilet rooms, a minimum of one hand dryer and one paper towel dispenser are required. They shall provide at a minimum of one each for every three lavatories. Hand dryers shall be activated by infrared sensors when the user's hands are placed below the exhaust port. Dryer must stop automatically when the user's hands are removed from airflow or after 90 seconds of operation. In non-public toilet rooms hand dryers need not be sensor activated.

7.16.2.2 Security Holders: Within each toilet stall in the Public Toilet Room, a stainless steel hook shall be provided to hold handbags and/or briefcases.

7.16.2.3 Toilet Seat Protector Dispensers: Within each toilet stall in the Public Toilet Rooms, a toilet seat protector dispenser shall be provided.

7.16.2.4 Baby Changing Facility: In each Public Toilet Room, a minimum of one baby changing facility shall be provided. Surfaces utilized for changing table/shelf shall be made of bacterial resistant materials and located near a lavatory to facilitate hand washing. A separate stainless steel trash container, hermetically sealed, shall be located directly adjacent to the baby changing facility for the disposal of diapers.

7.16.2.5 Sanitary Napkin Disposals: In each woman's toilet room stall, a stainless steel sanitary napkin disposal shall be provided.

7.16.2.6 Carry-On Shelf: In men's toilet room above each urinal, a briefcase/carry-on shelf 12" deep shall be provided.

7.16.2.7 Full Length Mirrors: Full-length mirrors in each public toilet room shall be provided near the exits.

7.16.3 Vanity: The lavatory configuration in public toilet rooms shall be "vanity" counter style with integral splash blocks made from monolithic natural or man made materials impervious to moisture and stains. A section of the vanity shall be designed to provide a code requirement for ADA accessibility. Faucet, pipe and counter design shall conform with ICC/ANSI A117.1.

7.16.4 Public Toilet Room Floor and Wall Finishes: Floor and wall finishes in Public Toilet Rooms shall minimize jointing and be impervious providing a stain and moisture resistance material. The grout shall be an acrylic resin material.

7.16.4.1 Urinal Surround Surfaces: The construction of surrounding walls and floor surfaces for urinals shall incorporate smooth, readily cleanable, and nonabsorbent finishes in accordance with current code requirements.

7.16.5 Unisex Companion Care Toilet Rooms: In terminal concourse buildings, a companion toilet room shall be provided for (6) or more public toilet room water closets within the facility. The companion toilet room shall provide for all ADA requirements, one lavatory, one toilet, a baby changing facility and a bench.

7.17 Passenger Conveyance Systems

7.17.1 Passenger Conveyance: Compliance with the ASME/ANSI A17.1 "Safety Code for Elevators and Escalators" and Americans with Disabilities Act (ADA) is required.

7.17.1.1 Design Redundancy: A/E shall consult with the Authority to determine design redundancy requirements.

7.17.1.2 Conveyance Equipment Monitoring System: All elevators, escalators and moving walkways shall be connected to the Authority's Conveyance Equipment Monitoring System (ACEMS). Elevators shall be delivered with the manufacturers ACEMS compatible interface pc card within the controller; elevator, escalators, and moving walkways shall be provided with the ACEMS network interface modules mounted within a wall mounted enclosure, within the Elevator Machine room with network connection to an Authority network switch.

7.17.1.3 Raceways for ACEMS: Provide raceways for communications and network connections to the ACEMS. Elevator Machine Rooms shall be provided with a minimum of 1½" conduit from the machine room to a communications room. Escalators and Moving Walkways shall be provided with ¾" conduit from each escalator and moving walkway equipment pit to an elevator machine room or communications room.

7.17.2 Elevators: All elevator cabs or a minimum of one elevator cab in a bank of elevators shall be sized to accommodate an ambulance stretcher 24 inches by 84 inches with two EMS personnel. Access into the elevator shall be as direct as possible and shall be provided as not to tilt the stretcher. Elevators accommodating an emergency stretcher and EMS personnel shall access the ground level. The minimum clear interior height of passenger elevators shall be 8' - 0". Any elevator sized to accommodate an emergency gurney shall be marked with the appropriate signage.

7.17.2.1 Firefighter Service: All elevators shall be provided with firefighter service, recall, etc. for fire department use during emergency operations.

7.17.2.2 Special Fire Alarm Interfaces and Fire Protection: Special Fire Alarm interfaces and Fire Protection measures are required for elevator shafts and machine rooms; refer to the Authority Building Codes Manual, Appendix 12.

7.17.2.3 Elevator Cab Lighting and Ventilation Control: Cab lights and ventilation shall be provided with automatic control per ASME 17.1, 204. 7b (2). After the conditions listed in the code exit for five minutes the cab lights and ventilation shall be turned off. Interruption of any condition shall cause the lights and ventilation to turn on.

7.17.2.4 Battery Powered Lowering System: Provide a battery operated lowering system for all hydraulic elevators.

7.17.3 Escalators: The width of all escalators shall accommodate a 40" wide step. Maximum speed of escalators shall be 90' per minute. All skirting adjacent to escalator treads shall be frictionless stainless steel. Provide a laminated glass barricade or other protection meeting the requirements of the USBC to protect against sliding on the escalator platform at the outside of the balustrade for the top and bottom of escalators.

7.17.4 Moving Walkways: The width of moving walkways shall be determined by the population served; maximum operating speed shall be 100' per minute. As the width of a moving walkway depends on the maximum slope of treadway and speed of treadway as mandated by ASME/ANSI A17.1, the A/E is responsible to coordinate the treadway slope and speed to achieve the optimum width as indicated above. All skirting adjacent to moving walkway pallets shall be stainless steel.

7.17.4.1 Caution Sign: Post a caution sign at 20 feet from the end of the moving walkway or as directed by the COTR. The sign shall be blade-mounted sign following the signage requirements of the Design Manual. The sign face toward

the direction of travel shall provide the following message: “Caution: Walkway Ends in 20 Feet”. The reverse sign face shall provide the following message: “Do Not Enter”.

7.17.4.2 Caution Message: The Public Address System design shall include a speaker zone located near the end of the moving walkway to provide the following Caution Message, “Caution, the moving walkway is ending."

7.18 Baggage Conveyance Systems

7.18.1 General: Baggage conveyor systems shall be designed to conform to the following requirements:

7.18.2 Public Areas: In public areas, baggage conveyor systems shall be located to provide a minimum clearance of 10' between the conveyor and an adjacent wall or other obstacles.

7.18.3 Conveyor Belt Access: Conveyor belt access openings to restricted areas of the AOA of the airport shall be closely coordinated with the AOA Security design requirements.

7.18.4 Conveyor Belt Access Openings through Firewalls: Shall be provided with fireproof doors that close automatically when conveyor is not in use.

7.18.5 Start Warning System: The conveyor shall be provided with a start warning system that shall activate an audible alarm and flashing light in the baggage room and areas where the public has access to the conveyor. After a short warning period, the system shall automatically start and the alarm and light shall stop.

7.18.6 Emergency Stop Stations: Shall be provided in baggage rooms and strategic public areas. When an emergency stop button is depressed, a red light shall be illuminated on all emergency stop buttons. The system shall be designed so that it may be restarted only from the station that actuated the emergency push button.

7.18.7 Automatic Stop of Conveyor Belts: The conveyor belt shall be automatically stopped by means of a photo-sensor located at the discharge end of each loading belt. The photo-sensor shall detect when no bags are left on the conveyor. A jam sensor shall be provided so that if baggage blocks the photo-sensor for a timed interval, the conveyor shall stop. A Jam Reset button shall be provided at the photo-sensor that must be reset before the conveyor can be restarted.

7.18.8 Structural Calculations: Shall be submitted showing codes are met for any conveyor equipment to be suspended from an existing structure. Proper vibration analysis and vibration isolation is required.

7.18.9 Minimum Width: All baggage conveyor belts must have a minimum width between sidewalls of 33 inches at Ronald Reagan Washington National Airport and 36" at Washington Dulles International Airport.

7.18.10 Wall Adjacency: In all areas where walls are adjacent to baggage claim devices or take-away belts, protection for the wall and finishes shall be provided. In public areas, the skirting below baggage-claim devices and wall-protection behind such devices shall be No. 4A Brushed Finish stainless steel, minimum 16-gauge, with suitable and substantial backing and support.

7.19 Architectural Concrete

7.19.1 General: Architectural concrete is defined as concrete that will be permanently exposed to view and therefore requires special care in selection of the concrete materials, forming, placing, and finishing obtaining the desired architectural appearance.

7.19.2 Acceptable Architectural Concrete: Achieving acceptable architectural concrete requires greater control of these components and the specification is the vehicle to provide the standards and requirements. The industry has developed several standards to define the requirements. The architectural concrete specifications should include text

as appropriate from the following American Concrete Institute (ACI) standards of practice:

301	-	Specification for Structural Concrete
303.1	-	Standard Specification for Cast-in-Place Architectural Concrete
303R	-	Guide to Cast-in-Place Architectural Concrete Practice
301	-	Specification for Structural Concrete, Ch. 6
212.4R	-	Guide for the Use of High-Range Water-Reducing Admixtures (Super-plasticizers) in Concrete, 5.4
533R	-	Guide for Precast Concrete Wall Panels, 5.3.4.5
548.6R	-	Polymer Concrete – Structural Applications: State-of-the-Art Report, 4.1
551R	-	Tilt-Up Concrete Structures, 2.16

7.19.3 Specific Standards and Requirements: Merely referring to the above documents in the specifications is not adequate. Specific standards and requirements should be provided. The architectural concrete specification should also include requirements for the Contractor to:

7.19.3.1 Quality Control Plan: Submit a Quality Control Plan for acceptance prior to commencing any construction of architectural concrete.

7.19.3.2 Field Mockups: Construct Field Mockups using procedures, equipment, materials, joint treatment, and simulated repairs and curing method in accordance with the quality control plan and the contract documents submitted for production of architectural concrete.

7.19.3.3 Qualifications and Responsibilities: The A/E shall prepare the contract specifications to require:

A. Responsibility of the Contractor – Contractor shall provide a project superintendent and forming and concrete subcontractors who are experienced in the construction of architectural concrete. Depending upon the size and relative importance of the project, the Construction Request for Proposal should include a requirement to submit these qualifications for review prior to contract award.

B. Qualification of QC Inspector – The QC Inspector shall be trained for inspection of architectural concrete and have a minimum ACI Certification as a Level II Concrete Construction Inspector.

7.19.3.4 Periodic Acceptance Requirements: Periodic acceptance requirements should be provided. Failure of the completed architectural concrete to receive acceptance during a review should require Contractor's submittal of a plan for remedial repair and proposed revision to methods of construction, for Authority review and acceptance, before proceeding with additional architectural concrete construction.

7.19.3.5 Final Acceptance Requirements: Final acceptance requirements should be provided – Contractor should be required to protect accepted architectural concrete from damage after completion of the architectural concrete construction until completion of project.

7.19.4 Concrete Curing: The preferred method of concrete curing is moisture curing in accordance with ACI 308. Alternate methods, i.e. curing compounds, must be submitted to the COTR for review and approval. The curing compounds, if submitted for consideration, shall be evaluated for compatibility with form releasing agents, sealers and finishes and applied in strict conformance with manufacturer recommendations. Select products that are clear, waterborne, membrane-forming curing and sealing compounds. Staining left by form releasing agents and formwork shall be cleaned prior to the applications of curing compounds.

7.20 Building Waterproofing

7.20.1 General: For detailing of building waterproofing at foundation walls, refer to **Exhibit III-7-4.**

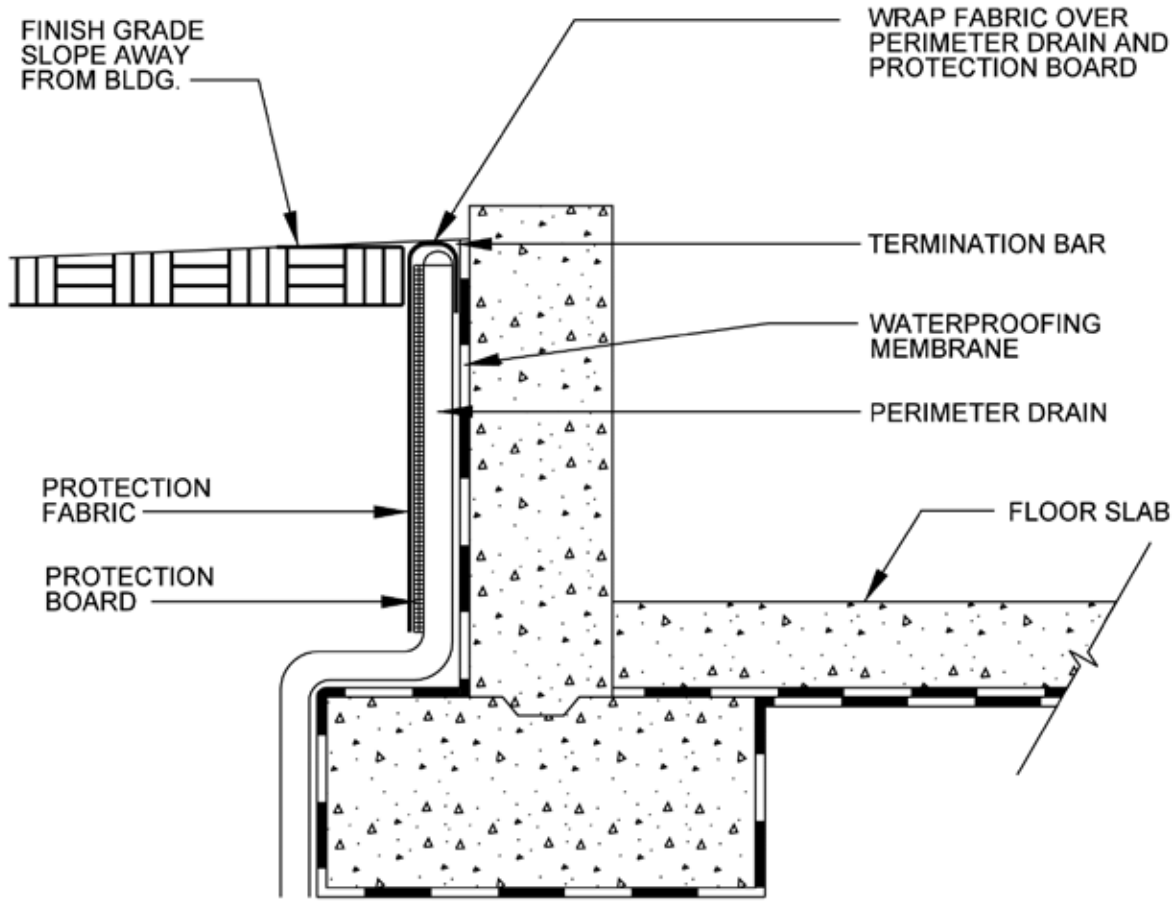

Waterproofing System Exhibit III-7-4

(This Page Blank)

CHAPTER 8 Structural Systems

The A/E shall design all projects so that the work required in the Construction Documents incorporates all relevant requirements as set forth below.

8.1 Design Loads

8.1.1 Code Requirements: All exposed buildings and other structures not subject to heavy vehicular loading shall be designed in accordance with the latest edition of the Virginia Uniform Statewide Building Code (USBC) except for the following more stringent requirements:

8.1.1.1 Wind Speed: The minimum basic wind speed (3-Second Gust) shall be 100 mph.

8.1.1.2 Roof Live Load: The minimum roof live load shall be 30 Pound per Square Foot (psf), applied to the horizontal projection of the roof. In addition, all building roofing systems shall be designed in accordance with Factory Mutual standards for a windstorm resistance rating/design of Class I-90.

8.1.1.3 American Association of State Highway Transportation Officials (AASHTO): Bridges and other structures exposed to heavy vehicular loading shall be designed in accordance with the latest edition of the American Association of State Highway Transportation Officials (AASHTO) design specifications, as modified by the Virginia Department of Transportation (VDOT).

8.1.2 Code Requirements for Special Structures: Exposed fuel storage tanks, potable water tanks, glycol storage, water tanks for fire protection services, and chilled water storage tanks shall be designed to the applicable codes including tank design and fabrication standards (such as AWWA, API, ACI, etc.) but wind load shall not be less than the following criteria:

8.1.2.1 The minimum wind velocity shall be 100 mph.

8.1.2.2 The minimum wind load pressures shall be:

30 PSF on vertical plane surfaces.
18 PSF on projected areas of cylindrical surfaces.
15 PSF on projected areas of conical and double curved surfaces.

8.2 Structural Calculations

8.2.1 General: Calculations shall conform to **Section II, Paragraph 2.11**.

8.3 Foundation Work

8.3.1 General: Foundation bearing capacity and elevations shall be verified by a registered Geotechnical Engineer licensed in the Commonwealth of Virginia, and the results coordinated with the Contracting Officer's Technical Representative or Resident Engineer prior to pouring concrete for foundations.

8.4 Corrosion Protection

8.4.1 General: The requirements for corrosion protection of structural concrete parking garage decks, vehicular traffic bridges and ramps, weather exposed pedestrian bridges, and in all associated columns or other vertical supports, tunnels, foundation, and shell of underground structures are as follows:

8.4.1.1 Concrete Cover: The minimum concrete cover for prestressed concrete shall be 1½" for all members. The minimum concrete cover for mild top reinforcement work shall be 2" for slabs and 3" for beams subject to outdoor environment and/or vehicular traffic. This shall include 2" for formed concrete exposed to earth and 3" for concrete cast directly against earth.

8.4.1.2 Water/Cement Ratio: The maximum water/cement ratio shall be 0.40 for concrete with 28 day compressive strength of 5000 psi or higher. ACI 318 "Requirements for Special Exposure Conditions" shall be followed for structural concrete with 28 day compressive strengths below 5000 psi (0.45 for 4500 psi and 0.50 for 4000 psi). The VDOT "Low Permeability Concrete

Specifications" shall be utilized regarding water/cement ratio and corrosion resistance for vehicular bridge structures.

8.4.1.3 Epoxy-Coated Reinforcing Steel: Epoxy coated reinforcing steel (rebar and welded wire fabric (WWF)) shall be utilized in structural concrete exposed to outdoor elements and earth including:

A. All floor decks of parking structures, loading docks, roofs and applicable cast-in-place manhole tops.

B. Final tunnel linings in cast-in-place, and precast concrete.

C. Foundations and shell of underground structures includes drilled piers, column, and wall footings with the dowel re-bars, mat slabs, framed slabs poured on ground, slabs on grade, trenches and sump pits, exterior station, and earth retaining walls, and station apron (cover) horizontal framing (girders, beams and slabs).

D. All highway bridge decks, parapets, piers, retaining walls, approach slabs, foundations, and abutments.

8.4.1.4 Drainage: The design shall incorporate provisions for adequate drainage of all the exposed decks, floors, etc.

8.5 Waterstops

8.5.1 General: Waterstops shall be installed at all construction joints below ground level.

8.6 Temporary Bracings/Excavation Support Systems/Shoring

8.6.1 General: Construction Documents shall clearly state the Contractor's responsibilities for design, installation and maintenance of temporary bracings and support systems during construction. The construction documents shall require the Contractor to hire a Professional Engineer, licensed in the Commonwealth of Virginia, to design, sign, and seal the final design documents and calculations for temporary bracing/excavation support systems and shoring.

8.6.2 Temporary Excavation Support Systems for Cut-And-Cover Construction: The A/E shall provide performance specifications within the construction documents (CDs) requiring the Contractor to design and construct the temporary support of excavation (SOE) system, to provide, read and maintain the necessary instrumentation and monitoring program, and to be prepared to provide immediate corrective actions. The A/E shall clearly define and specify requirements for safe and satisfactory performance of SOE systems including protection of surrounding facilities at project sites requiring cut-and-cover construction.

8.6.3 Design Criteria and Parameters: Design criteria and parameters provided by the A/E shall include requirements for instrumentation system and monitoring program. The listing of the parameters shall be comprehensive and defined as the minimum requirements. The information and requirements that the A/E shall provide and specify include the following:

8.6.3.1 The minimum design criteria and parameters (Design loads, surcharges and lateral ground pressure diagrams) for the anticipated conditions at the site based on the results of subsurface investigations and the A/E interpretation of the geotechnical data. Parameters shall include anticipated dynamic load conditions; critical effects of rock wedge stability, potential rock mass failure and associated pressures. The Contractor shall be required to verify and review the soil and rock conditions, provide rock mapping and photographic documentation before and during excavation, and evaluate existing conditions to enable adjustment of the SOE system without deviating from the limits shown in the CDs.

8.6.3.2 The minimum safety factors for stability analysis and material properties for design of each type of SOE system. Require Contractor to be responsible to obtain and verify the load carrying capacity of the support system

including the adhesion values and other assumptions used in the design.

8.6.3.3 The allowable deflections, displacements and threshold/limit values as measured by instrumentation readings.

8.6.3.4 A schematic design including drawings showing minimum acceptable dimensions of key components for a workable SOE scheme based on the specified design criteria and parameters, including a listing of the acceptable construction tolerances. The specifications shall require the Contractor to prepare and submit complete SOE calculations and design documents, signed and sealed by a Professional Engineer licensed in the Commonwealth of Virginia.

8.6.3.5 Drawings showing the required instrumentation with the monitoring requirements including frequency of readings. The CDs should clearly state the Contractor's responsibility and procedures for continuous and regular readings/monitoring of instrumentation and reporting the recorded data.

8.6.3.6 The requirement that the Contractor shall suspend excavation to take additional readings when needed and/or promptly implement preventive action measures in areas that the specified threshold values and tolerances of ground and SOE system are exceeded. Also include the requirement for the Contractor to prepare and submit a contingency plan with a list of stand-by equipment and materials for the necessary remedial measures to strengthen and stabilize the SOE system when excessive movements are detected.

8.6.3.7 The maximum allowable height of excavation lifts and limitations for unsupported horizontal length including maximum time duration of cut face exposure during excavation.

8.6.3.8 A listing of required Contractor personnel and qualifications, including a registered geotechnical engineer and quality control specialist for SOE.

8.6.3.9 The A/E's design criteria and parameters for the SOE, instrumentation systems, and monitoring requirements shall ensure adequate and reliable performance. The intent is to maximize personnel safety and minimize opportunities for construction disputes.

8.7 Cutting of Existing Concrete Floors or Structural Elements

8.7.1 General: Any structural cut or core through any floor or any structural component of any existing Authority building must be identified in a request at least 72 hours before the core or cut is anticipated to be made. In general, and specifically where post-tensioned tendons are present, the Authority will require non-destructive sub-surface testing prior to permitting any coring or cutting of floors or any structural component. The testing is intended to locate and avoid damage to reinforcing steel, post-tensioned tendons, and concealed utility lines. The party requesting the cut or core shall propose in their request the appropriate means to provide such testing as part of the request. The results of such tests are subject to prior approval by the Authority before any demolition, cutting, or coring.

8.8 Fall Protection Anchor Points

8.8.1 General: All roofs are subject to the USBC code and the OSHA Standards that specifically require guards or other measures for the protection of falls of personnel. The USBC code specifies when to use guards and the design requirements of guards required when equipment is located within 10 feet of a roof edge or other similar grade differences. In general, all roof penetrations for equipment should occur more than 10' from an edge; if not, guards must be part of the design if equipment is set on the roof level. Additional fall protection anchor points, above those required by code, and shall be provided as directed by the Authority. Prior to the 30% Design Submittal the A/E shall meet with the Authority's Project Manager and Risk Management Safety Manager to determine number, locations, and type of fall protection anchor points.

8.9 Waterproofing of Underground Structures

8.9.1 General: This section addresses the waterproofing design of underground structures which include tunnels and below-grade portion of buildings.

8.9.2 Waterproofing of Tunnels: For NATM, two-pass TBM, and Cut and Cover tunnels, use Polyvinyl chloride (PVC) waterproofing membrane system, external to cast in place concrete final linings. Details for installing waterproofing system may vary depending on type of initial support (Support of Excavation) and method of constructing final liner. Waterproofing membrane is not used for single-pass TBM tunnels.

8.9.3 Waterproofing of Below-Grade Portions of Structures: Use PVC waterproofing membrane system for underground structures that will be or may be connected to future tunnels. Provide connection/termination details to ensure compatibility with and watertight connections to PVC waterproofing membrane used for tunnel structures. For structures having no present or future connection to tunnels select waterproofing system which is most appropriate for the ground condition and the life expectancy of the building.

8.9.4 Design Requirements

8.9.4.1 Watertight Structures: The design objective for waterproofing tunnels and adjacent underground structures is to provide watertight structures with no water leakage.

8.9.4.2 PVC Waterproofing Membrane System: The A/E shall design the waterproofing for underground structures using a PVC waterproofing membrane system. System components include:

A. Geotextile fleece

B. PVC membrane;

C. Waterbars 16" wide with ribs 1½" high minimum;

D. Waterstops;

E. Termination/connection details;

F. Remedial measures

8.9.4.3 PVC Waterproofing Membrane: PVC Waterproofing Membrane shall be non-reinforced and of uniform thickness and surface texture, with the following minimum physical properties:

Properties	Values
Thickness	0.100 inch
Ultimate Tensile Strength	2200 lb./sq. in.
Ultimate Elongation	230%
Low Temperature Impact	Pass @ -20º F
Chemical Resistance	ph-Value 2 to 13
Flammability	Self extinguishing

8.9.4.4 Design Report and the Geotechnical Data Report: The A/E shall prepare a Geotechnical Data Report which includes evaluation of the soil and rock conditions, groundwater elevations and ground water quality for possible presence of jet fuel, oil solvents, asphalt coal tar pitch, and other chemical products which may affect PVC membrane.

8.9.4.5 In addition, the A/E shall review the Design and Geotechnical Data Reports prepared for adjacent projects to assess potential impact to and from adjacent structures.

8.9.4.6 Identification and Evaluation: The A/E shall identify and evaluate the product and construction requirements necessary to install the PVC waterproofing membrane system in the tunnels and in adjacent structures connecting to the tunnels. Among the requirements to be evaluated are:

A. Short and long term impacts on the performance of the waterproofing materials from subsurface and groundwater contaminants.

B. Connection/termination (if needed) details between the PVC waterproofing membrane in adjacent

structures and the NATM, Cut-and-Cover, and two-pass TBM tunnels.

C. Attachment, testing and acceptance requirements. Method of providing for maintenance and long-term repair of the waterproofing systems.

D. Any installation difficulties, which must be accounted for in the design.

8.9.5 Alternate Waterproofing Design: If the A/E believes that another Waterproofing System may be better suited for a specific condition, the A/E shall prepare an Evaluation Report with recommendations for the Authority's review. The report shall include comparisons between PVC and the alternate system with regard to performance attributes, compatibility and watertight connections between PVC and the alternate material, ease of installation, and length of warranties.

8.10 Tunneling

8.10.1 General: This section addresses the design of underground structures other than those constructed by cut-and-cover methods.

8.10.2 Alignment and Geometry: A general layout plan of the tunnel alignments shall be prepared by the A/E in coordination with the Airport Layout Plan (ALP). The A/E shall finalize this alignment subject to the approval of the Authority.

8.10.2.1 Required vehicle clearance envelopes are shown in **Exhibits III-8-1 through III-8-4**. The internal clear dimensions of the designed tunnels shall accommodate all functional requirements in addition to the vehicle clearance requirements in an economical configuration compatible with the adjoining structures.

8.10.3 Ground Conditions and Characterization: The A/E shall determine the site ground conditions by defining and conducting site investigation as necessary. The level of investigation shall be appropriate for the intended structures in accordance with the general principles defined in FHWA publication No HI-97-021 and the applicable ASTM standards.

8.10.3.1 The Authority will make available existing ground investigation information. The A/E shall collate and review all relevant existing and new investigation information for the Site and submit to the Authority for review and acceptance per requirements of **Section I, Paragraph 2.5**.

8.10.3.2 The A/E shall document their proposed investigations and submit for Authority approval prior to commencing any such investigations.

8.10.3.3 The soil properties for underground excavation design shall be assessed from the investigations. The method of analysis adopted, including soil continuum analyses, shall be appropriate for the properties assessed.

8.10.3.4 The rock shall be characterized and its anticipated behavior in response to tunneling used to develop Excavation and Support Classes. Among others, the factors to be considered include opening dimensions, overburden, discontinuity characteristics, Rock Quality Designation (RQD), fracture frequency, groundwater conditions, ground classification systems [such as Beniawski's Rock Mass Rating (RMR) or Barton's Q-system] and experience in similar ground and similar projects, including information from previous or ongoing construction work at the Airport.

8.10.4 Groundwater: The A/E shall review all existing applicable environmental reports and make provisions in the design for identified ground and groundwater contaminants.

8.10.4.1 The A/E shall define the following design groundwater levels.

A. Construction Condition: All likely events expected to occur throughout the construction duration of the project beginning with Construction Notice to Proceed and concurrent construction of adjacent projects.

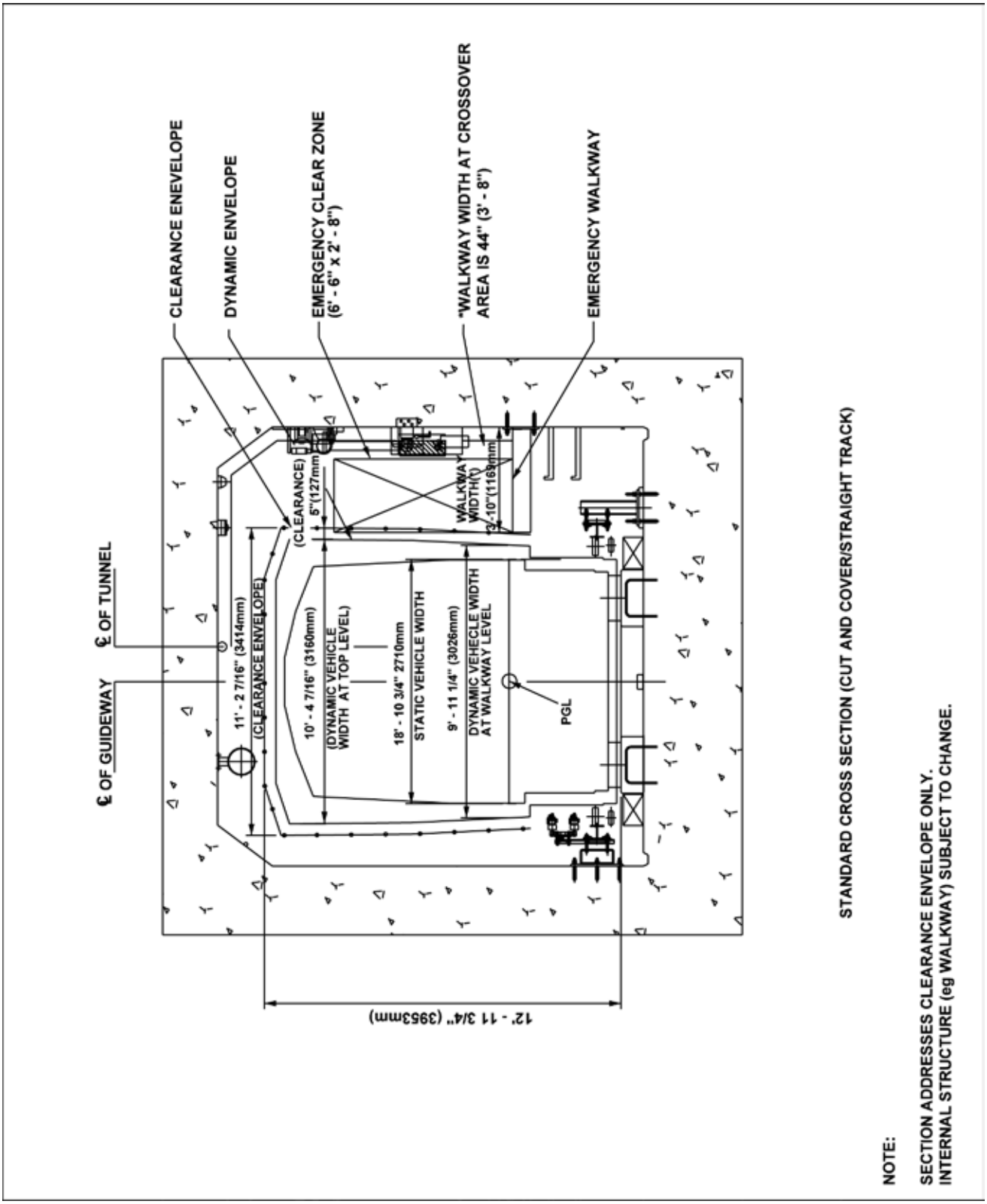

Cut and Cover Straight Track Standard Cross Section Exhibit III-8-1

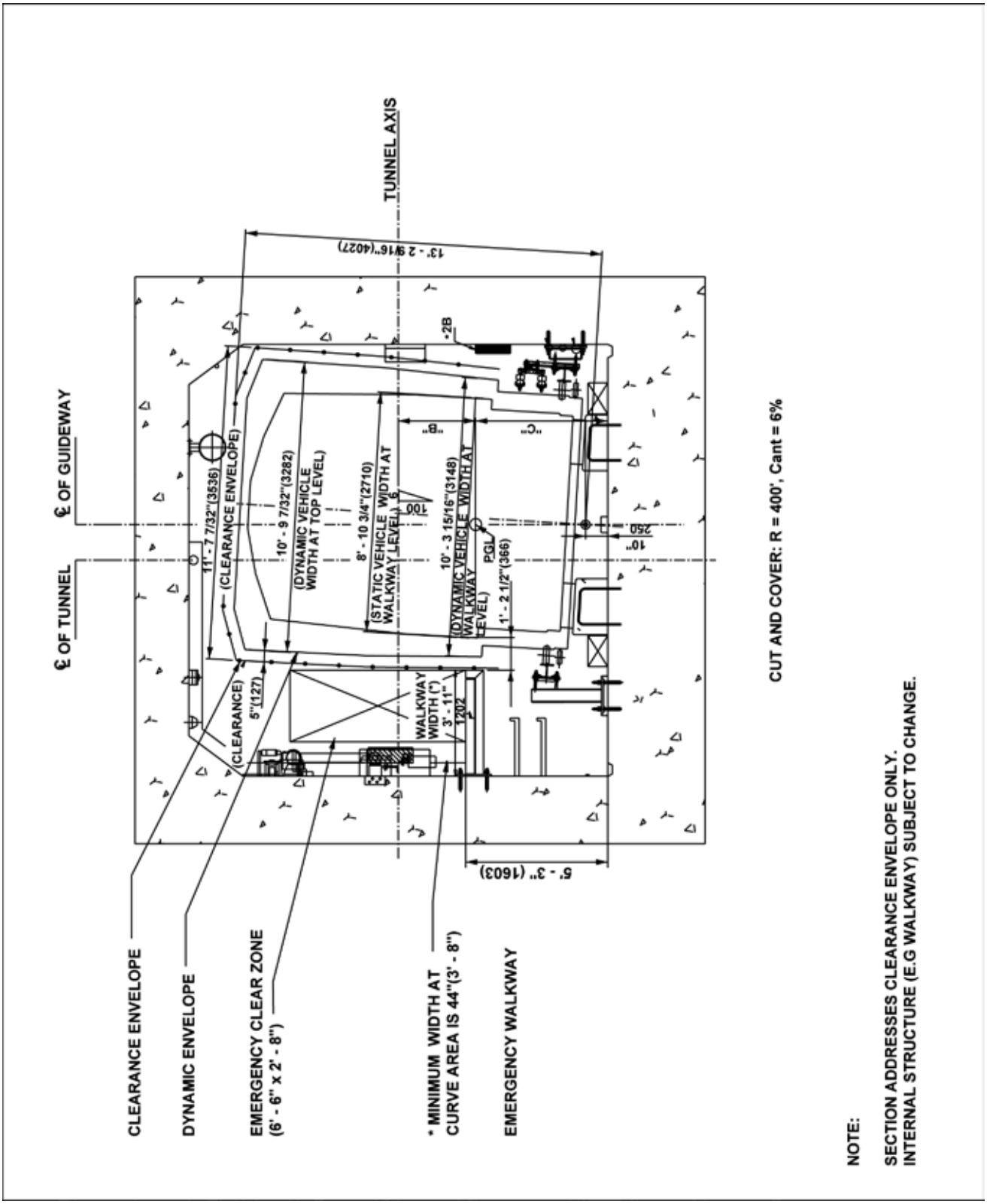

Cut and Cover Exhibit III-8-2

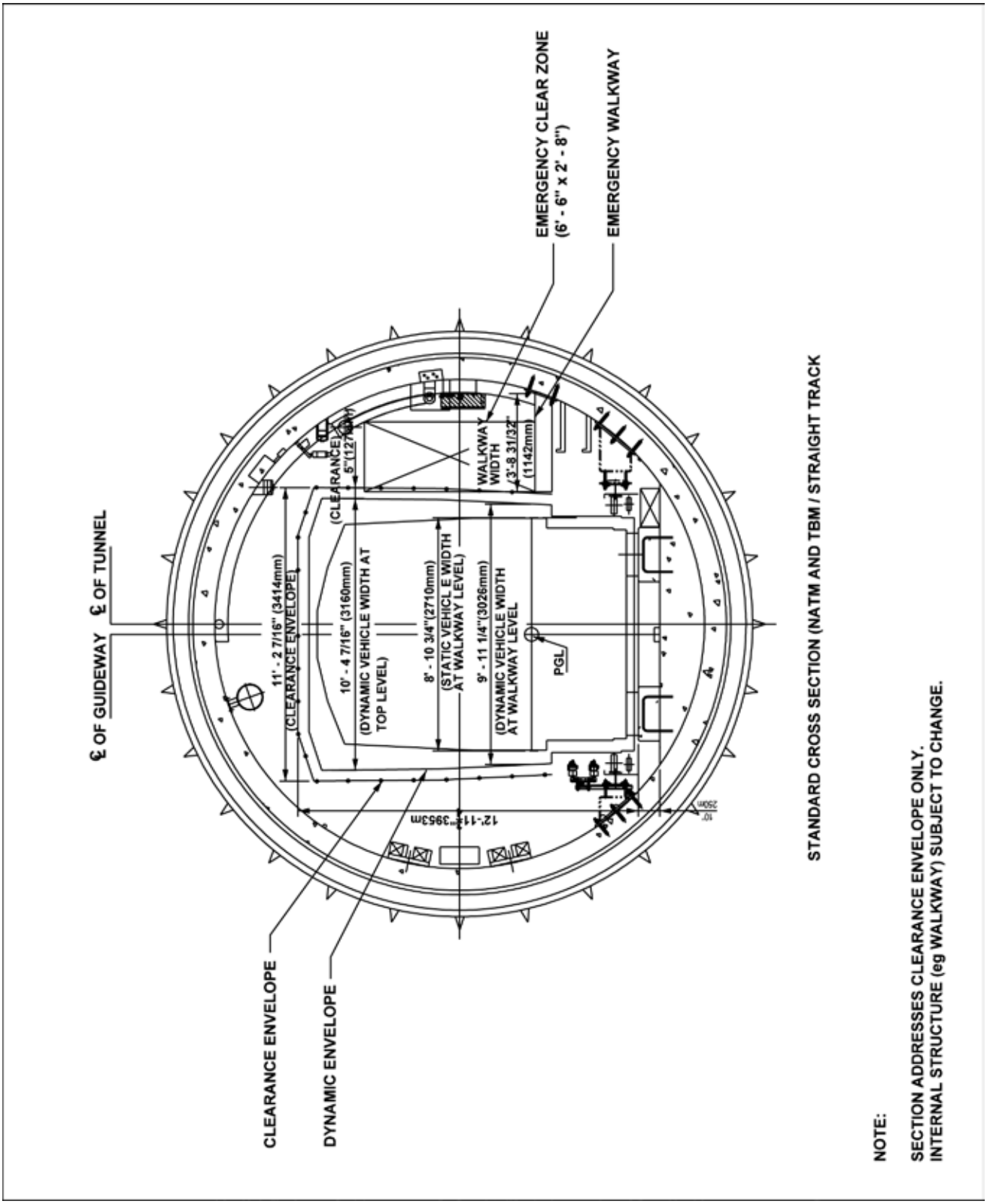

NATM and TBM Straight Track Standard Cross Section Exhibit III-8-3

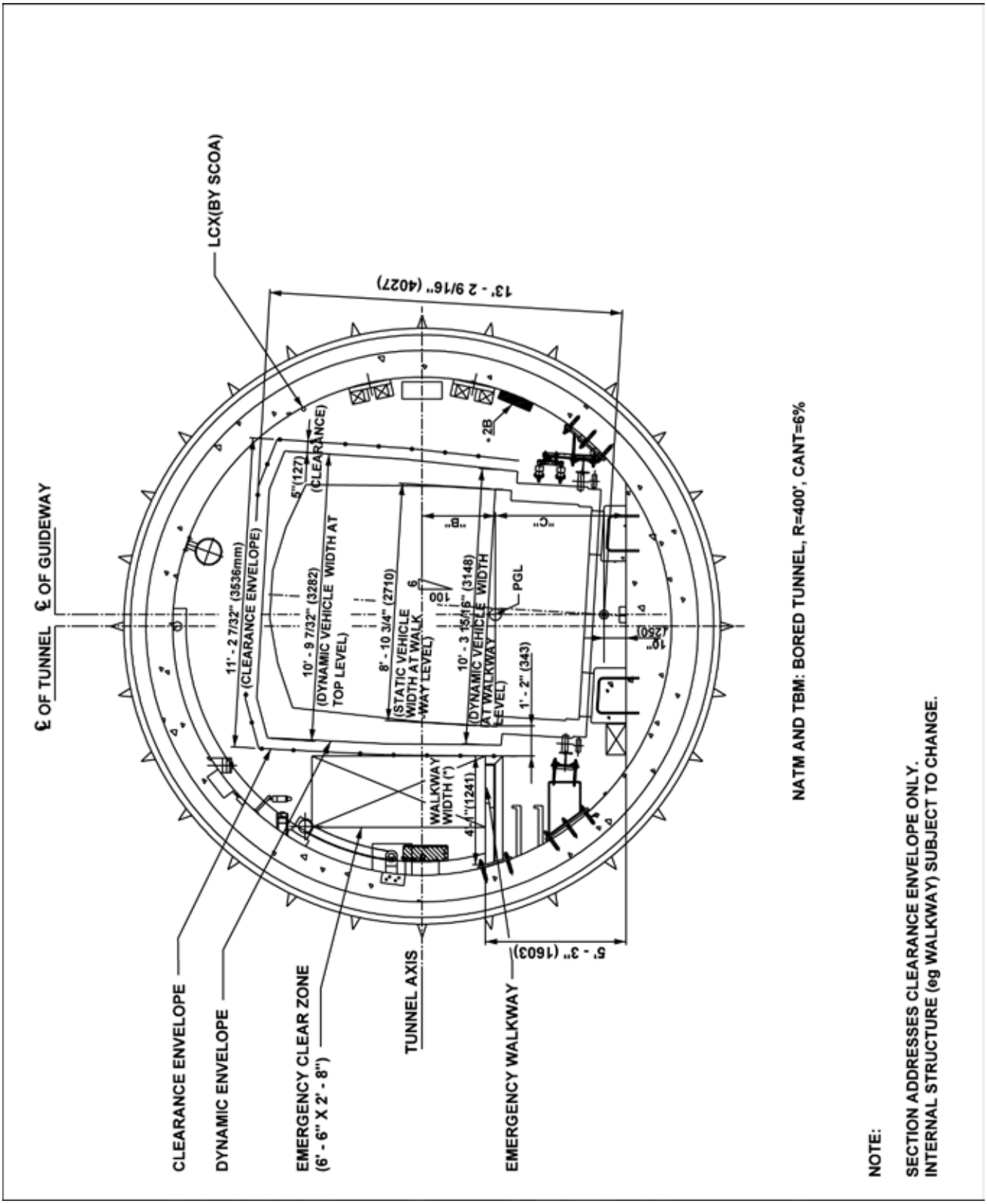

NATM and TBM Bored Tunnel Exhibit III-8-4

B. Operating Condition: Expected groundwater level and fluctuation for the life of the structures.

8.10.5 Existing Infrastructure: As part of the site investigation the A/E shall document all existing infrastructure including buildings, structures, services, utilities, pavements and fixed features that lie within the zone of influence of the project.

8.10.5.1 The tunnel design shall consider the existing infrastructure and propose construction methods that will ensure their continued integrity and functioning during and after construction. Where this is found to be impractical, the A/E may propose their temporary or permanent relocation.

8.10.6 Loads: Tunnel support and linings shall be designed for all expected loads including handling and jacking loads where applicable.

8.10.6.1 Tunnels shall be designed for the full expected hydrostatic head derived for the different groundwater conditions defined in this subsection.

8.10.6.2 The ground loads shall be derived from the parameters and design methods subject to the approval of the Authority.

8.10.6.3 The design surface live loads shall be commensurate with location and anticipated traffic for the life of the structure.

8.10.7 Temporary Support Design: The temporary support/initial lining shall be designed to minimize distortion in the surrounding ground, adjacent existing infrastructure, and the surrounding groundwater for the expected range of ground conditions.

8.10.7.1 Each Excavation and Support Class shall identify the required support elements, including pre-support, maximum unsupported tunnel length or opening span, subdivision into multiple drifts and sequence of drift excavation, all initial support elements, sequence of support installation and duration, between excavation and support installation.

8.10.7.2 The Excavation and Support Classes shall be shown on tunnel longitudinal profiles relative to the stationing and expected geologic conditions.

8.10.7.3 The movement of the ground and the support shall be derived from the analyses performed. These movements shall not encroach upon required subsequent lining thicknesses nor result in any instability. These movements shall be reported and form the basis for the specified threshold/limit values as referenced in **Paragraph 8.6**. These movements shall be used to define the type of instrumentation to be installed in the tunnels and the frequency of the monitoring for that instrumentation.

8.10.7.4 Designs shall be based upon analytical methods of stress/deformation analysis and excavation modeling using validated computer programs appropriate for the expected ground as approved by the Authority.

8.10.8 Permanent Support Design: The permanent support/lining to the tunnel may comprise the initial or primary lining, the secondary or final lining or a combination of the two.

8.10.8.1 The permanent support/lining in soil shall allow for stress redistribution and creep from the ground/structure interaction, and any secondary stresses arising from adjacent construction.

8.10.8.2 Where a segmental lining forms part or all of the permanent lining, the individual segments and completed ring shall be designed for all expected handling and shove/jacking loads. All gaskets and compression packers between segments shall be fully specified. Biodegradable materials shall not be used.

8.10.8.3 The design of permanent linings shall be based upon the loads derived from appropriate and validated computer programs.

8.10.9 Construction Methods: The design shall be based on the most efficient, safe and cost-effective excavation method that cause minimum disruption to airport operations. The design shall comply with the agreed movement/distortion criteria and shall achieve a high quality, watertight tunnel which minimizes maintenance requirements. Waterproofing requirements are defined in **Section III,** of this Manual.

8.10.9.1 Support Type: The support type is dependent upon the methods used to both excavate and support the ground. Consequently the support design shall take into account the construction method, excavation phasing and sequencing, and available staging areas.

8.10.9.2 Where excavation by TBM is proposed, the A/E shall define the requirements for the TBM, including but not limited to machine type and power, minimum cut size, cutter type, shielded or not, temporary face support (eg, slurry TBM) segment erection requirements, probing and back-grouting facilities and muck removal and treatment requirements.

8.10.9.3 The A/E shall develop an excavation key plan which indicates proposed location of tunnel access points, direction of tunneling, sequence of tunneling, sequence of lining installation, locations and dimensions of lay-down/staging areas, haul routes, and schedule milestones and constraints. This plan shall be updated with each design submittal.

8.10.9.4 The A/E shall ensure that tunnel designs specifically exclude the use of shotcrete for the final liner, except where approved by the Authority in writing during the design process.

8.10.10 Contractor Key Personnel: The Contract Documents shall require provision of the key Contractor personnel having appropriate underground excavation tunnel experience. The A/E shall include in Specification Section 'Quality Requirements' for the following NATM and/or TBM key personnel for each and every work shift:

8.10.10.1 NATM [TBM] Tunnel Engineers.

8.10.10.2 NATM [TBM] Tunnel Shift Superintendents.

8.10.10.3 TBM Tunnel Shift Superintendents.

8.10.10.4 TBM Operator

8.10.11 Ground Surface Movement Prediction: The A/E shall evaluate and predict all ground movements and distortions at or near the ground surface resulting from the designed underground openings and define the extent of such movements.

8.10.11.1 Ground movements due to underground excavation shall be assessed for all stages of construction including pretreatment, dewatering, pre-installed support, time delay between excavation, installation of temporary support, placement of initial and final lining, and other major activities.

8.10.11.2 Where the predicted ground movements and distortions may impact existing infrastructure, the likely effects of such shall be evaluated and the method of excavation modified, or suitable protective or remedial works designed, as necessary.

8.10.11.3 The A/E shall provide an instrumentation plan, which specifies instrument types and locations to monitor for any likely movement or distortion of these existing facilities for the full duration of construction.

8.10.12 Dynamic Stability: The effects of vibration on the proposed excavations and support arising from the use of mechanical equipment or blasting in these and any adjacent projects, concurrent or future, shall be evaluated and included as part of the design with required limitations, constraints, or prohibitions clearly noted in the Contract Documents. Refer to **Section III, Paragraph 4.9** for further requirements.

8.10.12.1 Earthquake loadings shall be evaluated using increased loading based on a pseudo-static model.

8.10.13 Ground Changes Arising from Underground Excavation: Allowance for the effects of the envisioned excavations on the surrounding ground (e.g., blasting causing loosening and increased permeability) shall be evaluated, and provisions for these effects included in the designs.

8.10.14 Interfaces: Particular care shall be taken to allow for the most appropriate excavation method at ground and structural interfaces. The A/E shall provide detailing of each and every interface between underground structures, with particular care to design a watertight connection with compatible and continuous waterproofing materials.

8.10.15 Instrumentation and Monitoring: The A/E shall specify the minimum levels and types of instrumentation deemed necessary, and shall provide an Instrumentation Plan showing the required instruments and locations.

8.10.15.1 The designed instrumentation shall be consistent with expected movements and distortions of the ground and likely affected existing infrastructure, and with any expected groundwater fluctuations induced by the envisioned construction.

8.10.15.2 The monitoring and reporting procedures, including methods and frequency, shall be specified such that real time records obtained from this monitoring can be readily processed and distributed to the interested parties within the shortest possible time.

8.10.15.3 The Contract Documents shall require the monitoring records to establish the initial baseline record prior to start of any construction work, the progress record, the interval and cumulative differences and the threshold/limit values for each and every instrument monitored.

8.10.15.4 For existing facilities adjacent to areas of construction, the A/E shall specify the type and location of instruments to be installed by the Contractor, as well as require a preconstruction video inventory to document the condition of the facility existing prior to start of construction.

CHAPTER 9 Mechanical General Standards

The A/E shall design all projects so that the work required in the Construction Documents incorporates all relevant requirements as set forth below.

9.1 Design Coordination

9.1.1 General: The A/E shall perform a quality control review of all documents for completeness, constructability, and coordination with all building trades. Particular attention shall be given to the following:

9.1.2 Plan Coordination: Work shall be coordinated with all disciplines to ensure that size and location of all required chases, soffits, access panel requirements, etc., are indicated on the plans. All ductwork and pipe larger than 12" shall be drawn double-line unless otherwise required by the Design Manual.

9.1.3 Sectional Views and Elevations: Sectional views and elevations that clearly define the details and space constraints shall be developed from floor plans included within the construction drawings. All mechanical equipment rooms shall have a minimum of two composite floor-to-ceiling sections with the cutting plane through the major axes that define equipment sizes, piping and ductwork, and their relationship to architectural, structural, and electrical installations. Full, half, revolved, and broken out sections are acceptable. Offset cutting planes are undesirable. Identify the clearances necessary to perform preventive maintenance and space requirements for equipment servicing/disassembly by dimensioning, noting and/or cross-hatching.

9.1.4 Mechanical Rooms: All mechanical rooms shall be designed and located to facilitate the removal, transport and replacement of the largest equipment component housed within the room. Mechanical room locations shall be depicted in plan view with expanded details shown by part plan at a scale no less than ¼" = 1' – 0". All ductwork and pipe larger than 6" shall be drawn double line. All mechanical rooms shall be adequately ventilated and provided with telephone jacks, convenience receptacles, hose bibbs, and floor drains. A minimum of one 120 volt duplex convenience receptacle shall be provided for each 400 sq. ft. or portion thereof of mechanical room floor space.

9.1.5 Tunnel Ventilation Fan Rooms and Smoke Fan Rooms: All tunnel ventilation fan rooms or smoke control fan rooms shall be designed to the requirements noted above for mechanical rooms but do not provide hose bibbs and floor drains. Tunnel ventilation fan rooms shall be equipped with warning devices that will activate informing the personnel who may be present to vacate those areas as the tunnel ventilation fans are about to start.

9.1.6 Control Sequence of Operations: No control sequence of operations shall be provided in the contract specifications. Show all sequence of operations both graphically and described with text on the contract drawings.

9.1.7 Large Equipment Installation Sequencing: In conjunction with other design disciplines, provide the necessary scheduling, sequencing, movement and positioning of large equipment into the building during construction, including provisions for temporary removal/replacement of existing building components.

9.1.8 Access and Accommodation for Future Equipment: The designated location for future equipment and its service clearance shall be clearly identified on the drawings. If practical, the entire haul path, from the point where the equipment enters the building envelope to the designated location, may also be marked or noted. If an adequately sized opening on the building envelope does not already exist, provisions, such as removable wall and roof panels, shall be made with prior approval of the Authority. In choosing the envelope opening scheme and location, consideration shall be given to hauling access to the building and the reach of cranes and lift-trucks.

9.1.9 Special and Owner-Furnished Equipment: Special types of equipment, including owner-furnished and

contractor-installed materials, shall be coordinated for correct rough-in and attachment requirements.

9.1.10 Interferences: Piping, ductwork, equipment, electrical conduits, etc. shall be reviewed for interferences that would prevent proper installation of each system.

9.1.11 Clearances: Piping, ductwork and equipment shall have adequate clearance between ceiling construction and the underside of beams, recessed lighting fixtures, and other interferences where space is limited.

9.1.12 Accessibility: Piping, ductwork, and equipment, including ceiling mounted devices shall be coordinated with building construction, beams, etc., to provide adequate clearances and accessibility for maintenance. Piping and electrical devices, such as panelboards, switchgear, and similar components, shall be coordinated with other engineering disciplines. Clearances and locations shall be demonstrated graphically, as early as practicable but not later than 60% Submittal.

9.1.13 Penetrations: Mechanical equipment/utility penetrations through floors, walls, and roofs shall be coordinated and identified on the architectural and structural construction drawings. Proper cross-referencing between drawings shall be provided. Details for protection of all penetrations of fire resistive construction are required on plans submitted for a construction permit.

9.1.14 Construction of New Buildings over Existing Utilities: Buildings or other structures shall not be constructed over existing or new utility lines except where such utility lines serve the buildings or structures. Utilities shall be relocated as required.

9.1.15 Equipment Protection and System Protection: Project specifications shall clearly indicate that all equipment and systems intended for a project shall be properly protected from damage, corrosion, and weather during shipment, in-transit storage, job-site storage, field/shop prep, installation, and checkout until the work is accepted by the Authority. Ends of piping, valves, ducts, and fittings shall be protected from abuse and the entry of moisture. Pumps, motors, electrical equipment, and other equipment with antifriction or sleeve bearings shall be stored in weather-tight structures maintained at a temperature of above 60° F. Electrical equipment, controls, and insulation shall be protected against moisture and water damage. The Authority may, at Contractor's risk and expense, disallow or reject the installation of previously approved equipment, if it is later determined to have deteriorated considerably during the Contractor's custody, such as during shipment, storage, and/or installation.

9.1.16 Special Support and Anchors: Piping and ductwork supports, anchors, supports-guides, and pre-insulated versions thereof, which exert force on the structure other than those forces produced by gravity, equipment, and ductwork, shall be detailed on the structural drawings and coordinated with appropriate mechanical and plumbing drawings.

9.1.17 Fire and Smoke Dampers: Fire/smoke dampers and access panel requirements shall be properly identified on the mechanical drawings, coordinated with the designated fire/smoke barriers shown on the Architectural floor plans and as required by all applicable codes. A fire/smoke damper detail shall be included in the design drawings.

9.1.18 Cold Condensate: All cold condensate runoff in mechanical rooms shall be trapped, piped and terminated into funnel type floor drains located adjacent to the equipment served. The floor drain location and drain piping shall be coordinated and installed to avoid tripping hazards.

9.1.19 Operating And Maintenance Instructions: Refer to **Section III, Paragraph 2.18** of this section.

9.1.20 Coordination of Mechanical System Components: Occasionally, A/Es utilize a specification style that, for a category of generally similar mechanical systems within a project, offers a choice list of industry-accepted accessories or sub-components. It is the responsibility of the A/E to identify or schedule the suitable

combinations of the listed choices to be applied in each identifiable condition.

9.1.20.1 Example: Specification for thermal insulation: shall be I n accordance with the International Energy Conservation Code or otherwise specified by the project scope. A schedule is required to indicate the coordinated combination of installation material, density, thickness, finish, jacket, insulation method, etc. required for each service condition to be encountered. The schedule may be in a tabular or outline format.

(This Page Blank)

CHAPTER 10 Piping Systems

The A/E shall design all projects so that the work required in the Construction Documents incorporates all relevant requirements as set forth below.

10.1 Piping General

10.1.1 General: Construction Documents that specify piping shall include a schedule of application. The application schedule may be in tabular or outline format. It shall clearly identify each service, the intended pipe material, pressure class, fittings, joints, pipe thickness/schedule, special notes, exclusions, options, etc.

10.1.2 Lead Free Joints: Lead or lead containing filler metals shall not be used in joining copper tubing and fittings with brazed or soldered joints in potable water systems. For all new potable water systems, the Contractor shall be required to submit test results certifying the system to have lead free concentrations below 15 PPB and copper concentrations below 1,300 PPB.

10.1.3 Underground Pipe Joints: Threaded joints shall not be used in any underground piping unless otherwise noted in a specific piping system in this manual. Brazed joints shall be required in underground copper tubing.

10.1.4 Insulation for Existing Piping: New insulation shall be provided on existing piping where new connections are made, asbestos insulation removed or insulation damaged or missing. Fill all voids and seal joints between new and existing insulation.

10.1.5 Pipe Expansion Joints and Expansion Compensation Devices: Pipe expansion loops, L-bends, Z-bends and pipe offsets shall be provided to compensate pipe expansion and contraction. If space is limited, metal-bellows, rubber, and packed slip pipe expansion joints and expansion compensation devices may be used with the Authority's written approval.

10.1.6 Pipe Wall Thickness: A minimum schedule 40 pipe wall thickness shall be required up to and including 10" steel pipes. The minimum steel pipe wall thickness shall be 0.375" for pipes 12" and larger.

10.1.7 Natural Gas Pipelines: For additional information on natural gas pipelines work at Ronald Reagan Washington Airport and Washington Dulles International Airport, refer to **Section III, Paragraph 4.6.3**.

10.2 Pipe Material

10.2.1 Domestic Hot and Cold Water

10.2.1.1 Domestic Hot and Cold Water Lines Shall Meet the Following Requirements:

A. Tubing: Seamless copper tube per ASTM B 88, Type L (interior) or Type K (exterior and interior below the grade slab)

B. Joints: Soldered with copper-phosphorous alloy (95%Tin-5% Antimony) filler metal

C. Fittings: Cast copper alloy pressure fitting per ASME B16.18 or wrought copper and copper alloy pressure fitting per ASME B16.22. For pipe sizes 2" and larger, fittings and joints may be copper grooved-end fittings and grooved-end-tube couplings consisting of housing sections, EPDM-rubber gaskets suitable for hot and cold water, and bolts and nuts.

D. Disinfection: All domestic hot and cold water lines shall be disinfected prior to utilization per the requirement of the International Plumbing Code and the VA Department of Health.

10.2.2 Make-Up Water: Refer to **Section III, Paragraph 5.7** for Underground Water Mains. Backflow preventers shall be provided to prevent cross contamination with potable water lines. Make-up water lines shall meet the following requirements:

10.2.2.1 Make-Up Water 2" and Smaller

A. Seamless copper tube per ASTM B88, Type L. Joints soldered with 95% tin- 5% antimony filler metal. Cast copper alloy pressure fittings per ASME B16.18 or wrought copper and copper alloy pressure fittings per ASME B16.22.

B. Black or galvanized steel - ASTM A53, Schedules 40 and 80. Pipe joints shall be threaded in accordance with ANSI/ASME B1.20.1.

10.2.2.2 Make-Up Water 2½" and Larger

A. Black or galvanized steel – ASTM A53, Schedule 40. Pipe joints shall be beveled and butt-welded or threaded in accordance with ANSI/ASME B1.20.1.

10.2.3 Irrigation: Water Ductile Iron, ABS, CPVC, or PVC Schedule 40.

10.2.4 Heating Hot Water

10.2.4.1 General Requirements: Heating hot water system shall be defined as a system containing water not exceeding 212º F. The heating hot water piping system shall meet the following requirements:

A. The operating pressure and temperature shall be determined by A/E for each project. The minimum design pressure and temperature for the heating hot water system shall be 150 psig at 250º F.

B. The piping system shall be in strict accordance with ASME B31.9, Building Services Piping Code, except that 2 of the first 6 production welds of each qualified welder shall be randomly selected by the Authority and radiographed and 10% of the remaining shop and field joints shall be randomly selected by the Authority and radiographed. All radiographic examinations shall be performed by an independent inspector who is qualified and certified. All radiographic inspection shall be performed as required per ASME B31.1, Power Piping Code. Acceptance standards shall be per ASME B31.9. The cost of all radiograph examinations shall be the responsibility of the Contractor.

C. Failure of any field joints will require cutting and re-welding the joint. After the joint is re-welded, one additional weld will be selected by the Authority for a radiographic examination at the Contractor's expense.

D. The hydrostatic test pressure shall be 1.5 times the design pressure.

10.2.4.2 Pipes 2" and Smaller

A. Black Steel - ASTM A53, Type S (seamless) or Type E (Electric-Resistance Welded), Grade B, Schedule 40. Pipe joints shall be threaded in accordance with ANSI/ASME B1.20.1. (Interior and exterior).

B. Seamless Copper Tube - ASTM B88, Type L, Hard drawn. Pipe joints shall be solder joint, 95%-5% solder composition (Tin-Antimony) per ASTM B32. Interior use only with prior written approval of the Authority.

10.2.4.3 Pipes 2½" or Larger

A. Black Steel - ASTM A 53 Type S (seamless) or Type E (Electric-Resistance Welded), Grade B, Schedule 40. Pipe joints shall be beveled and butt-welded interior and exterior.

10.2.5 High Temperature Hot Water

10.2.5.1 General Requirements: High temperature hot water system shall be defined as a system containing water exceeding 212º F. The high temperature hot water piping system shall meet the following requirements:

A. The operating pressure and temperature shall be determined by the A/E for each project. The minimum design pressure and temperature of the high temperature hot water piping system at Ronald Reagan

Washington National Airport and Washington Dulles International Airport shall be 450 psig at 380º F.

B. The piping system shall be in strict accordance with ASME B31.1, Power Piping Code. For underground direct buried piping only, a radiographic examination shall be required on 100% of all field joints. For all other piping, 3 of the first 8 production welds of each qualified welder shall be randomly selected by the Authority and radiographed, and 15% of the remaining shop and field welds shall be randomly selected by the Authority and radiographed. The cost of all radiographic examinations shall be the responsibility of the Contractor. Socket welds are exempt from the radiographing requirement. All radiographic examinations shall be performed by an independent inspector who is qualified and certified. Failure of any field joints will require cutting and re-welding the joint. After the joint is re-welded, one additional weld will be selected by the Authority for a radiographic examination at the Contractor's expense.

C. All high temperature hot water piping shall be seamless black steel, ASTM A 106, Grade B. High temperature hot water piping 8" and smaller shall be Schedule XS (same as Schedule 80). High temperature hot water piping 10" to 20" shall be schedule XS. Where possible, pipes shall be provided with double random length (approximately 40' long) to minimize the number of field joints.

10.2.5.2 Pipes 2" and Smaller:

A. Pipe joints shall be socket-welded. (interior and exterior)

10.2.5.3 Pipes 2½" or Larger:

A. Pipe joints shall be beveled and butt-welded. (interior and exterior)

10.2.5.4 Underground Direct Buried Pipes: All pipe sizes. Pipes shall be pre-fabricated and pre-insulated ready for installation:

A. Pipe joints shall be beveled and butt-welded.

B. Piping shall include a protective jacket of corrosion resistant material encasing the insulation on the carrier pipe.

C. Where possible, pipes shall be provided with double random length (approximately 40 feet long) to minimize the number of field joints.

10.2.6 Chilled Water

10.2.6.1 General Requirements: The chilled water piping system shall meet the following requirements:

A. The operating pressure and temperature shall be determined by the A/E for each project. The minimum design pressure and temperature for the chilled water piping system shall be 150 psig at 100º F.

B. All piping joints shall be radiographed in accordance with the requirements stated in the following three paragraphs. All radiographic examinations shall be performed by an independent inspector who is qualified and certified. Failure of any field joints will require cutting and re-welding the joint. After the joint is re-welded, an additional weld will be selected by the Authority for a radiographic examination at the Contractor's expense.

C. All piping in buildings (piping on the building side of the isolation valve between the building and the campus distribution system) shall be in strict accordance with ASME B31.9, Building Services Piping Code, except that 2 of the first 6 production welds of each qualified welder shall be randomly selected by the Authority and radiographed and 10% of the remaining shop and field joints shall be randomly selected by the Authority and radiographed. All radiographic inspection shall be performed as required per ASME B31.1, Power Piping Code. Acceptance standards shall be per ASME B31.9.

D. All central plant piping and all campus distribution system piping shall be in strict accordance with ASME B31.1, Power Piping Code. For underground direct buried distribution piping only, a radiographic examination shall be required on 100% of all field joints. For all other central plant and campus distribution system piping, 2 of the first 6 production welds of each qualified welder shall be randomly selected by the Authority and radiographed and 10% of the remaining shop and field joints shall be randomly selected by the Authority and radiographed.

E. The hydrostatic test pressure shall be 1.5 times the design pressure.

10.2.6.2 Piping 2" Diameter and Smaller

A. Black Steel - ASTM A53, Type S (seamless) or Type E (Electric-Resistance Welded), Grade B, Schedule 80, except that Grade B, Schedule 40 may be used for building services piping in accordance with ASME B31.9. Pipe joints shall be threaded in accordance with ANSI/ASME B1.20.1.

B. Seamless Copper Tube - ASTM B88, Type L, Hard drawn. Pipe joints shall be solder joint, 95%-5% solder composition (Tin-Antimony) per ASTM B32. (Interior use only with prior approval of the Authority).

10.2.6.3 Piping 2½" to 24" Diameter

A. Black Steel - ASTM A 53 Type S (seamless) or Type E (Electric-Resistance Welded), Grade B, Standard Schedule (same as Schedule 40 for 10" diameter and under; for 12" to 24" diameter, wall thickness is 0.375"). Pipe joints shall be beveled and butt-welded.

10.2.6.4 Underground direct buried pipes - All sizes

A. Pipes shall be pre-fabricated and pre-insulated ready for installation.

B. Protective Jacket: Corrosion resistant material encasing the insulation on the pipe.

C. Where possible, pipes shall be provided with double random length (approximately 40' long) to minimize the number of field joints.

10.2.7 Condenser Water (Cooling Tower): Central Plant condenser water piping shall be in strict accordance with ASME B31.1, Power Piping Code, except that a radiographic examination shall be required for 10% of all shop and field welded joints. For each qualified welder, 2 of the first 6 production welds in the field shall be selected and radiographed. All radiographic examinations shall be performed by an independent inspector who is qualified and certified. Failure of any joints will require cutting and re-welding the joint. After the joint is re-welded, one additional weld will be selected by the Authority for a radiographic examination at the Contractor's expense. Condenser water piping, 2" and smaller, shall be black steel ASTM A53, Type S (seamless) or Type E (Electric-Resistance Welded), Grade B, Schedule 80. Pipe joints shall be threaded in accordance with ANSI/ASME B1.20.1. Condenser water piping 2½" and larger, shall be black steel ASTM A 53 Type S (seamless) or Type E (Electric-Resistance Welded), Grade B, Standard Schedule (same as Schedule 40 for 10" diameter and under; for 12" to 24" diameter, wall thickness is 0.375"). Pipe joints shall be beveled and butt-welded. Pipe wall thickness shall be in conformance with ASME B31.1.

10.2.8 Refrigerant Piping: Refrigerant Piping - Type ACR hard drawn copper tubing in accordance with the International Mechanical Code.

10.2.9 Equipment Vents: Equipment vents – Schedule 40 black steel or Type L copper.

10.2.10 Air-Conditioning Condensate Drain: Type L hard drawn copper. PVC is permitted for condensate drain for rooftop equipment, provided it is properly pitched and supported.

10.2.11 Sanitary Building Gravity Drains: Sanitary building gravity drains above grade slab shall be service class cast-iron, hub/spigot or hubless type joints. Couplings shall be heavy-duty, type 304 stainless steel. Below grade slab shall be extra heavy class cast-iron, hub/spigot type joints. All piping shall be provided with a minimum drain slope of ⅛" per foot. The minimum size of a gravity building sanitary drain below grade shall be 3". At Washington Dulles International Airport, PVC Schedule 40 per ASTM D2665 with solvent cement joints per ASTM D2564 may be acceptable above grade slab, except in an air plenum, with written approval of the Authority no later than the 60% design submittal.

10.2.12 Vent Piping: Above grade slab vent piping and fittings shall be cast iron hubless type joints with heavy-duty type 304 stainless steel couplings or schedule 40 galvanized steel pipe with drainage fittings.

10.2.13 Sanitary Sewer (Buried Exterior): Sanitary sewer shall be ductile iron with appropriate type joints. At Washington Dulles International Airport, schedule 40 PVC per ASTM D2665 with solvent cement joints per ASTM D2564 or HDPE conforming to ASTM D3350 may be used with prior written approval by the Authority, including the Building Codes and Environmental Department, no later than the 60% design submittal.

10.2.14 Sanitary Force Mains (Exterior): At Ronald Reagan Washington National Airport, sanitary force mains shall be ductile iron pipe with mechanical joints, hub/spigot type. At Washington Dulles International Airport, sanitary force mains shall be ductile iron pipe with push-on joints.

10.2.15 Sanitary and Storm Force Mains, Interior: Above grade slab sanitary and storm force mains within facilities shall be a minimum 2" copper piping with soldered joints.

10.2.16 Storm Building Gravity Drain: Above grade slab cast iron piping shall be service weight with hubless or hub/spigot type joints. Below grade slab cast iron piping shall be extra heavy with hub/spigot type joints. All cast iron pipe and fittings shall be per ASTM A74. Couplings shall be heavy-duty, type 304 stainless steel. All piping shall be provided with a minimum drain slope of ⅛" per foot. At Washington Dulles International Airport, Schedule 40 PVC may be acceptable for small buildings, except in an air plenum, with prior written approval of the Authority no later than the 60% design submittal.

10.2.17 Subsoil Drainage: Subsoil drainage - perforated PVC.

10.2.18 Natural Gas (Interior and Exterior - Above Ground): Natural Gas (interior) - Schedule 40 black steel, malleable iron fittings. Only welded joints are allowed in concealed spaces.

10.2.18.1 Washington Dulles International Airport: Standard delivery pressures shall be either 7" water column or 2 psi for all of interior/tenant lines. All interior pipe sizing and equipment specification shall be based on the above pressure settings. If special conditions warrant, A/E shall submit any request for other delivery design pressure to the Authority's Utility Services Division for approval.

10.2.19 Natural Gas (Exterior Underground): All exterior underground natural gas piping at Ronald Reagan Washington Airport shall be provided by Washington Gas Company. Natural gas distribution piping design and construction (exterior underground; including tenant meters) at Washington Dulles International Airport shall be in accordance with the latest Natural Gas System Design and Construction Manual for Washington Dulles International Airport, Metropolitan Washington Airports Authority.

10.3 Piping Identification Markings and Color Codes

10.3.1 General: All piping shall be identified by the use of pipe marker bands. Pipes shall be marked in accordance with the Latest ASME A13.1 standards and color coded as indicated in Table 10.1. Markings shall include arrows indicating direction of flow. Markings shall be installed at a minimum of every 20' on straight runs where there are no

visibility obstructions. In areas where visibility of pipe is obstructed or numerous other pipes exist, markings shall be installed as approved to enable a pipeline to be easily traced along its entire path. At Ronald Reagan Washington National Airport, the entire length of the indoor natural gas piping shall be painted yellow. Refer to **Section III, Paragraph 4.10**, for requirements for marking underground utility piping. Legend requirements are contained in the following table.

TABLE – 10.1

LEGEND	LETTER COLOR	BACKGROUND COLOR
Chilled Water Return	White	Green
Chilled Water Supply	White	Green
Compressed Air	Black	Yellow
Condensate Drain	White	Green
Condenser Water Supply	White	Green
Condenser Water Return	White	Green
Domestic Cold Water	White	Green
Domestic Hot Water	Black	Yellow
Drain	White	Green
Exhaust	Black	Yellow
Fire Protection Water	White	Red
Fuel Oil	Black	Yellow
Fuel Oil Vent	Black	Yellow
Gasoline	Black	Yellow
Glycol	Black	Yellow
Hi-Temp Hot Water Supply	Black	Yellow
Hi-Temp Hot Water Return	Black	Yellow
Hot Water Supply	Black	Yellow
Hot Water Return	Black	Yellow
Industrial Wastewater	White	Green
Irrigation	Black	Yellow
Make-Up Water	White	Green
Natural Gas	Black	Yellow
Non-Potable Water	Black	Yellow
Vent	White	Green
Potable Water	White	Green
Pumped Condensate	White	Green
Domestic Hot Water - Recirculation	Black	Yellow
Refrigerant Liquid	Black	Yellow
Refrigerant Suction	Black	Yellow
Roof Drain	White	Green
Sanitary Sewer	White	Green
Secondary Hot Water Return	Black	Yellow
Secondary Hot Water Supply	Black	Yellow
Secondary Chilled Water	White	Green
Softened Water	White	Green
Storm Sewer	White	Green
Domestic Tempered Water	Black	Yellow

10.4 Piping Installation

10.4.1 Critical Areas: For critical areas, a detailed area chart/plan shall be furnished and prominently displayed showing the location(s) of all new or revised piping and valves and sizes thereof. All piping shall be labeled for identification purposes.

10.5 Welding Inspector Qualifications

10.5.1 General: Welding inspections and non-destructive testing shall be performed by individuals who are certified as AWS-QC1 Inspectors. When 100% visual inspection of welding is required, the qualified inspector shall be present on a full-time basis during the welding process.

10.5.2 Welding Acceptance Standards

10.5.3 Visual: The Contractor shall be responsible for visual inspection. Visual inspection shall meet the requirements of ASME B31.1, B31.9, and AWS-D1.1, as appropriate for the visual examination for the weldments.

10.5.4 Radiographic: When welds have been either identified in the Construction Documents or randomly selected by the Authority for radiographic examination, the acceptance criteria of ASME B31.1, and AWS D1.1 for radiographic examination will take precedence over the visual examination requirements normally required for those welds as the basis of rejection.

10.5.5 Inspections and Tests by the Authority: The Authority may perform random inspection and supplemental non-destructive testing (NDT) throughout the project. The cost of supplemental NDT will be borne by the Authority. The Contractor shall be responsible for all correction and repair of defects and the re-examination of weld repairs at no cost to the Authority.

10.6 Water Treatment At Washington Dulles International Airport

10.6.1 General: Water treatment for Washington Dulles International Airport chilled water, and high temperature hot water, and heating hot water systems, shall be supplied through Ondeo-Nalco.

(This Page Blank)

CHAPTER 11 Heating, Ventilating, and Air Conditioning

The A/E shall design all projects so that the work required in the Construction Documents incorporates all relevant requirements as set forth below.

11.1 Design Conditions

11.1.1 General: The winter and summer indoor comfort design dry-bulb temperatures shall be 70º F and 75º F respectively, unless otherwise indicated. Indoor summer design relative humidity shall be 50%. Humidification system is generally not required except for special purpose spaces or facilities as so designated. Outside design temperatures shall be as indicated in the current edition of the ASHRAE Handbook of Fundamentals. Outside design conditions shall be as recommended by ASHRAE, 1 and 99% frequency intervals for summer and winter respectively as indicated below:

11.1.2 Ronald Reagan Washington National Airport - Washington National Airport, Virginia

Summer: 92° F, Dry Bulb; 76° F, Wet Bulb
Winter: 20° F, Dry Bulb

11.1.3 Washington Dulles International Airport

Summer: 90.4° F, Dry Bulb; 74.3° F, Wet Bulb
Winter: 14.5° F, Dry Bulb

11.2 Indoor Air Quality

11.2.1 General: Minimum acceptable indoor air quality, including maximum permissible indoor concentrations of contaminants shall be in accordance with the latest version of ASHRAE Standard 62.1 - Ventilation for Acceptable Indoor Air Quality.

11.2.2 Air Filtration: During planning, new design and renovation design, A/E shall evaluate the need to provide gas phase filtration. Media should be selected for a minimum service life of 12 months under the operating conditions expected. The A/E shall not consider electronic air cleaners.

11.2.3 Outside Opening Protection: Outside air intake openings and exhaust openings shall be protected with screens with opening size of ⅜" minimum and ½" maximum; all screens must be fully accessible for cleaning and replacement.

11.2.4 Special Ventilation Requirements

11.2.4.1 Designated Smoking Areas: Exhaust ventilation shall be provided in all designated smoking areas. Air removed from the smoking areas shall not be re-circulated in order to prevent secondary contamination of the indoor air. The minimum exhaust from smoking areas shall be 90 CFM per person with 70 persons per 1,000 sq. ft. estimated maximum occupant load. For additional information on Designated Smoking Areas, refer to **Section III, Paragraph 7.3**.

11.2.4.2 Toilet Rooms: The minimum exhaust from toilet rooms shall be 100 CFM per water closet or urinal, or 2 CFM per sq. ft. of room area, whichever is greater.

11.2.4.3 Janitor's Closets: The minimum exhaust from janitor's closets shall be 100 CFM per service sink or mop sink, or 2 CFM per sq. ft. of room area, whichever is greater.

11.2.5 Re-circulation of Air: Return air systems shall not convey objectionable odors from one occupancy to another occupancy of dissimilar use. Isolation of objectionable odors shall be considered early in the design of air handling equipment with return air systems.

11.2.6 Outside Air Ventilation: Mechanical calculations shall be submitted that detail the basis for determining the quantity of outside air provided. The outside air quantity shall be sufficient for both building pressurization and occupancy requirements. Outside air ventilation requirements and the location of outside air intakes shall be

considered early in design. The calculated outside air ventilation quantity shall provide both for base building and Tenant requirements. Calculations shall be summarized in a manner that facilitates mechanical code review.

11.2.7 Infiltration at Building Entrances: The designers shall evaluate the effect of infiltration of outside air at building entrances, including mobile lounge docks at Washington Dulles International Airport, on indoor temperatures for both winter and summer conditions. The evaluation shall include the frequency of door opening, the prevailing wind speed and direction, and the adjacency and type of occupants (such as, transient vs. non-transient). The design shall include architectural arrangements and/or mechanical systems, where, required, to limit temperature variations to acceptable levels.

11.2.8 Electrical Equipment Rooms and Electrical Closets: Where located within buildings that are air-conditioned, electrical rooms and closets containing substations or switchboards and panelboards shall be air-conditioned, if practicable. In other locations, the room shall be cooled with mechanical ventilation and ventilation air shall be filtered. Adequate cooling shall be provided for electrical closets that contain transformers or other heat generating equipment.

11.3 Noise Control

11.3.1 General: During planning, new design, and renovation design, designers shall consider the anticipated indoor activities and related noises likely to be generated in each space. Where necessary, noise reduction features shall be specifically included in the design to obtain acceptable sound levels. Noise level recommendations in ASHRAE fundamentals and systems handbooks may be used as a minimum standard. Operating and maintenance personnel are, by necessity, present in central plants, mechanical equipment rooms, and other indoor utility rooms for long periods at a time. Designers may be required to prove to the satisfaction of the Authority that the overall noise level in such indoor locations and adjacent spaces are not objectionable or harmful to personnel, or that effective noise reduction/containment features or accessories have been provided in the design. At such locations consideration shall be given to the treatment of individual noisy equipment or group treatment, especially where multiple equipment may operate simultaneously. In no case shall the sound level exceed 85 db(a) continuous or 140 db impulse, regardless of the duration of exposure. For central plants, designers shall perform a noise level analysis and present alternative schemes for reduction of noise levels to acceptable levels, while also maintaining acceptable maintenance access to equipment.

11.4 HVAC Systems

11.4.1 Central Plant: Except for facilities in remote areas where service from the central utility plant is not feasible, all heating, ventilating, and air conditioning systems shall be designed to utilize the central plants. All new construction shall be designed based on the premise that high temperature hot water will not be available during the summer months. Central plants at each airport are designed to produce chilled water and high temperature hot water as follows:

11.4.1.1 Ronald Reagan Washington National Airport:

A. Chilled water is supplied at 42° F with a design return temperature of 60° F.

B. High temperature hot water is supplied at 380° F with a design return temperature of 240° F.

11.4.1.2 Washington Dulles International Airport:

A. Chilled water is supplied at 36° F with a design return temperature of 56° F.

B. High temperature hot water is supplied at 380° F with a design return temperature of 240° F.

C. The chilled water supply design temperature for the Washington Dulles International Airport - South Utility

Building (SUB) and all facilities served by it shall be 40º F with a return water temperature rise of 20º F.

11.4.2 Heating Hot Water Systems: At Washington Dulles International Airport, heating hot water systems (approximately 200º F) that are designed for use with air handling equipment that utilizes 100% outside air shall use glycol for freeze protection.

11.4.3 Heating Hot Water and Chilled Water Coils: Heating hot water (approximately 200° F) and chilled water coils shall be provided with a minimum tube wall thickness of .025". The number of fins per inch shall not exceed 12. Chilled water coils shall be selected with coil circuiting that avoids heat transfer degradation due to laminar flow. Full load tube velocities of minimum 3' per second should be selected while avoiding excessive water pressure drops.

11.4.4 End-Of-Run Bypasses: Where end-of-run bypasses are used in chilled water systems, flows shall be regulated so as to not significantly diminish the system return water temperature. Similarly, where end-of-run bypasses are used in high temperature hot water systems, flows shall be regulated so as to not significantly increase the system return water temperature.

11.4.5 Water for Heat Rejection: The use of potable water for heat rejection in water-cooled refrigeration equipment is not normally permitted. When permitted, such water shall not be returned to the Airport potable water system. At Ronald Reagan Washington National Airport, connection to the building central chilled water system may be allowed for cooling equipment condensers, such as refrigerators, ice-makers, yogurt machines, etc. The use of chilled water or potable water for heat rejection, and the locations selected for cooling towers, shall be subject to approval of the Authority Engineering and Maintenance Department.

11.4.6 Air Handling Systems: The minimum supply air temperature for air handling systems shall be 50° F DB unless written approval for an alternate supply air temperature is obtained from the Authority, no later than the 60% Design Review Meeting.

11.4.7 Electric Resistance Heating: Electric resistance heating shall not be used for either the primary or back-up system without written approval from the Authority, no later than the 60% Design Review Meeting.

11.5 Welding in High Temperature Hot Water Systems

11.5.1 Welders Qualifications: Each welder and welding operator assigned to work on high temperature hot water systems shall be qualified in accordance with the applicable requirements of ASME B31.1, B31.3, B31.4, B31.5, or B31.8.

11.5.2 Welding Inspector Qualifications: For Welding Inspector Qualifications and Welding Acceptance Standards, refer to **Section III, Paragraph 10.5**.

11.6 Heat Exchangers

11.6.1 Plate Type: Horizontal stainless steel plate type heat exchangers are preferred for use in chilled water systems. Horizontal plate type heat exchangers are required for medium temperature heating hot water (HW) to heat hot glycol solution heat transfer applications. High temperature hot water shall not be used to heat glycol solution.

11.6.2 Shell and Tube: Shell and tube heat exchangers are required for the High Temperature Hot Water (HTHW) to Hot Water (HW) service. The HTHW to HW heat exchanger designed capacity shall be 75% of the calculated heating load. The design and installation of the heat exchanger shall comply with the applicable requirements of the State of Virginia Boiler and Pressure Vessel Safety Act and ASME Boiler and Pressure Vessel Code, Section VIII. The heat exchanger shall be selected for the expected thermal cycling based on heating load variation. The need for anchors and isolation of the HTHW and HW piping near the point of connection to the heat exchanger shall be

evaluated by the designer to ensure that excessive stress is not transferred to the heat exchanger or piping.

11.6.2.1 Tube/Shell Design Conditions: The minimum design pressure and temperature of HTHW (tubeside) shall be 450 psig at 380° F. The tube material and thickness shall be suitable to meet the design criteria. The heat exchanger shall be located such that the tube bundle may be removed/repaired without disassembly/ removal of piping and wall. The clear space for tube bundle removal must be shown on plans. The minimum design pressure and temperature of secondary hot water (shellside) shall be 150 psig at 250° F.

11.6.2.2 Shell Protection: The heat exchanger shell shall be protected with a pressure relief valve with pressure relief piping extended to an outdoor location that does not cause a hazard, as approved by the Authority. The heat exchanger shell shall be provided with a (minimum) 3-inch flanged connection for the pressure relief valve. Pressure relief piping shall have welded joints. The design and installation of the heat exchanger and pressure relief piping shall conform to ASME B31.1 “Power Piping Code”. The pressure relief valve and piping shall be sized to relieve the full tube rupture flow to outdoor per ASME Boiler and Pressure Vessel Code, Section VIII, Paragraph UG-133(d) interpretation VIII-89-85. Design calculations for the relief valve and piping shall be provided. The routing of the pressure relief piping and the termination location shall be considered early in the facility design process.

11.6.2.3 Control System: The heat exchanger controls shall be provided and installed by Siemens Building Technologies, Inc., and shall be interfaced with the existing Airport EMCS system. Refer to **Paragraph 11.11.1**.

11.6.2.4 Temperature Regulation of Secondary Hot Water: The secondary hot water supply temperature shall be controlled to the set point by a normally closed automatic temperature control valve in the HTHW return piping from the heat exchanger. This automatic temperature control valve shall be sized specifically for the intended application. Over sizing of the temperature control valve (such as, installation of a line size valve) shall be avoided to prevent a large temperature fluctuation resulting from an unstable valve operation. The valve actuator shall be sized and selected with adequate torque to close off against the operating differential pressure not less than 110 psig between HTHW supply and return mains.

11.6.2.5 Safety Controls and Alarms: As a safety measure, an additional normally closed automatic isolation valve is required in the HTHW supply pipe at the heat exchanger. The function of this valve is described below under “Software and Hardwired Safeties”. The following safety features shall be provided:

A. Software Safeties: The following software safeties are required. These software safeties shall not be overridden when the EMCS is operated in “Operator Priority” mode.

1) Maximum rate of opening of automatic temperature control valve in HTHW return pipe shall be full stroke of valve stem in 30 minutes (adjustable) to prevent thermal shock under all operating conditions.

2) The automatic temperature control valve in HTHW return pipe and the automatic isolation valve in HTHW supply pipe shall close under the following conditions:

3) Lack of operation of either secondary hot water pumps (lead pump and standby) as sensed by pump starters.

a) Lack of operation of either secondary hot water pumps (lead pump and standby) as sensed by pump differential pressure switch such as, pump coupling failure.

b) Secondary hot water supply temperature leaving the heat exchanger exceeds the setpoint by 10º F (adjustable).

c) Secondary hot water supply pressure exceeds 135 psig (adjustable).

d) Detection of out range condition for secondary hot water supply temperature transmitter and/or pressure transmitter.

e) After valves are commanded closed, the secondary hot water pumps shall operate for a minimum of 5 minutes (adjustable) to remove residual heat from the heat exchanger before they are shut-down.

B. Software Alarms: The following software alarms shall be programmed into the EMCS system as a minimum:

1) High secondary hot water supply temperature immediately leaving the heat exchanger as served by a remote bulb thermostat (binary input).

2) High secondary hot water supply temperature immediately leaving the heat exchanger (analog).

3) High secondary hot water supply pressure immediately after the heat exchanger (analog).

4) Secondary hot water pump(s) on-off status from pump starter auxiliary contacts (binary input).

5) Low pressure differential pressure across secondary hot water pump(s) (binary input).

6) Expansion tank high pressure (analog).

7) Expansion tank low pressure (analog).

8) Out of range condition for secondary hot water supply temperature transmitter.

9) Out of range condition for the secondary hot water supply pressure transmitter.

C. Hardwired Safeties: The following hardwired safeties shall be provided as a minimum. These safeties shall not be overridden by Hand-Off-Automatic (HOA) switches for the secondary hot water pumps in any switch position. The automatic temperature control valve in HTHW return pipe and the automatic isolation valve in HTHW supply pipe shall close under the following conditions:

1) EMCS panel failure.

2) Loss of power to control system.

3) Lack of closure of auxiliary contacts at motor starter on at least one secondary hot water pump.

4) High secondary hot water supply temperature immediately leaving the heat exchanger. Provide manual reset.

5) Low differential pressure at secondary hot water pump(s).

6) Closure of valves by hardwired safeties shall have no effect on secondary hot water pump operation.

11.6.2.6 Local Control Panel: A local control panel shall be provided inside the entry door to the mechanical room where the heat exchanger is located. This control panel shall be equipped with “HTHW Shutdown” and “Reset” pushbuttons. Depressing the “HTHW Shutdown” button shall open the hardwired safeties circuit and close the automatic temperature control valve in HTHW return pipe and the automatic isolation valve in HTHW supply pipe in order to test the valve closure function. Depressing the “Reset” button shall close the hardwired safeties circuit and allow the valves to open under the normal sequence of operation.

11.7 Air-Conditioning Equipment and Power Supply

11.7.1 Refrigerant Pressure Device: All air-conditioning units, 3 tons or greater, shall be equipped with a high/low refrigerant pressure device with manual reset.

11.7.2 Variable Speed Drives: All central station air-handling system designs shall include a review of the applicability of two-speed motors and variable speed drives with manual override provisions.

11.7.3 Condensing Units on Grade: Air-conditioning condensing units on grade shall be set on a poured concrete slab with a minimum thickness of 4". Pre-cast concrete slabs and extruded polycarbonate pavers are prohibited.

11.7.4 Floor Mounted Air-Handling Equipment: A/E shall consider the height requirement to allow proper drainage of condensate from the cooling coil pan in draw-thru air-handling equipment via a condensate trap in relationship to the negative pressure induced by the operation of such equipment. The drainage of the condensate shall not be impaired due to the lack of height between the elevation of the cooling coil pan drain connection and the finished floor. The height of the condensate trap and the concrete pad on which the air-handling equipment is installed shall be clearly shown and specified in Contract Documents.

11.7.5 Power Supply: Air-conditioning units shall be 480 volts rated, if available. Units over 3 tons shall be 3 phase. Units 5 tons or larger shall be equipped with single-phase, phase-reversal and under-voltage protection. Automatic reset is acceptable. Units greater than 15 tons shall require manual reset. For buildings that have 3 or more air-conditioning units, reset switches shall be located in one designated location in a central control unit designed to allow units to be manually reset in a staged sequence.

11.8 Rooftop Equipment

11.8.1 Installation: Roof-mounted equipment is generally not permitted. Approval for the use of roof-mounted equipment shall be obtained prior to design, when alternative locations for indoor or ground models are not available. Acceptable access to all roof-mounted equipment shall be provided. Ladders, where provided, shall be OSHA approved. Vibration eliminators shall be installed on the mountings of all rooftop equipment. Rooftop equipment, including supports, piping, ductwork, electrical conduit, etc. , that is visible from the street, adjacent parking lots or elevated roadways shall be painted to match adjacent wall surfaces. Curb mounted height above the roof shall be a minimum of 12". Condensate lines from all rooftop equipment (AHU, A/C, and chillers) shall be piped according to manufacturer's recommendation but no less than ¾" pipe and shall be terminated at roof drains where practical. Direct discharge of any drain type is not permitted. All condensate drains shall be trapped, and a union fitting shall be provided at each side of the trap. Condensate drain piping on roof shall be securely mounted. Visual screening is required for all roof-mounted equipment. Refer to **Section III, Paragraph 7.9**.

11.8.2 Clearances above Rooftop: Rooftop equipment (air-handler units, air-conditioners, chillers, etc.) shall include provisions to raise or install equipment in such a manner that all equipment is structurally supported to provide a minimum 18" clearance above the rooftop. Whenever the mounting height of the equipment above the roof exceeds 7' – 6" measured to top of panel, a grated platform and ladders shall be provided at all locations where maintenance access is required.

11.8.3 Piping, Ductwork, and Utility Requirements: All piping, electrical conduits, ductwork, or other utilities shall be run underneath the roof deck and connected to the equipment. In those instances during retrofits, where it proves impossible to connect from below, permission to connect above the roof shall be obtained in writing through the Authority designated construction representative from the Airport Engineering & Maintenance Departments, and

all lines shall be secured and supported a minimum 18" above the roof. Supporting frames shall be cylindrical, metal and rigid, and shall be mounted to the roof structural members and flashed into the existing roof for a watertight seal. Pitch pockets and wood supports are not acceptable. A weatherproof GFCI electrical convenience receptacle on a dedicated circuit and adequate nighttime lighting equipped with a switch is required for maintenance and repair functions. Provide an adjacent roof top hydrant if there is no existing rooftop hydrant available within a 50' radius of the roof top equipment.

11.9 Ductwork

11.9.1 Duct Construction: All heating, ventilating, and air-conditioning ductwork systems, including basic duct construction fittings, hangers, supports, casings, and exterior components shall be constructed and installed in accordance with the latest edition of SMACNA and ASHRAE standards. Generally, rigid ductwork designed for the purpose of environmental conditioning shall be zinc-coated sheet steel (standard G60 coating) to conform to specific pressure-velocity classifications as defined by SMACNA Duct Construction Standards.

11.9.2 Flexible Connections: Flexible connections of neoprene-coated flameproof fabric shall be utilized wherever ductwork is connected to rotating equipment, such as fans, air-handling units, etc., that may induce thermal, axial, transverse, or torsional movement.

11.9.3 Flexible Duct: Flexible duct shall comply with UL 181 Class 1, shall meet or exceed NFPA 90A-90B rating, and shall have pressure rating of 6-inch wg positive and 1-inch wg negative for duct with diameter up to 12-inch. Maximum length of flexible duct shall be 5 feet. Flexible duct shall not penetrate floor/ceiling assemblies.

11.9.4 Duct Access Openings: Duct access openings in all main duct feeders in every straight segment shall be provided. For segments longer than 50', an access panel shall be installed a minimum of every 50'. Access opening shall be provided for each duct-mounted device, such as fire dampers. Duct access openings shall be provided on both sides of sound attenuators.

11.9.5 Fire Dampers: Provide fire dampers where ducts pass through firewalls, fire partitions, floor slabs and chases, and comply with all provisions of NFPA Standard 90A and as required by the USBC.

11.9.5.1 Links: Furnish with 165° F fusible links.

11.9.5.2 Damper Labels: Label fire dampers with the required class designation and UL label.

11.9.5.3 Directional Arrows: Provide air-flow directional arrows on all fire dampers.

11.9.5.4 Fire Damper Sizing: Fire dampers shall be sized so that the damper does not impede airflow or diminish cross sectional area of the duct.

11.9.6 Acoustical Duct Lining: Although the use of internal acoustical duct lining is allowed, the extent of its application should be minimized. Serious consideration must be given to the health and maintenance concerns associated with its application, such as the potential for microbial growth and the difficulty in accessing the entire length of the duct interior for cleaning/maintenance purposes. Early design development reports shall address the effort made in minimizing the requirements for internal acoustical lining, if applicable, and a discussion of the alternative noise control measures or devices considered.

11.10 Valve Requirements

11.10.1 General: The following minimum requirements for valves shall be met:

11.10.1.1 Main shut-off Valves: Main Shut-off valves except High temperature hot water main shutoff valves shall be suitably rated for the intended service and location in the system. In no case shall the rating be less than Class 150 lbs. Valves 2½" or larger shall be flanged, and shall be repackable while the system is under pressure (except

where this feature is unavailable). For heating hot water and chilled water main shutoff valves, capability for tight shutoff shall be considered in valve selection and specification.

11.10.1.2 High Temperature Hot Water Valves

11.10.1.3 Rating: Shall be rated at 400° F, 400 psig. Valves shall be back seated to make it possible for valve repacking while system is in service (except where this feature is unavailable). Stem packings and lubricants for valves and gear operators that do not degrade at the maximum service temperature shall be specified. At Washington Dulles International Airport, plug type valves, if used, shall be Nordstrom "Dynamic Balance." Where a bypass is required on Nordstrom "Dynamic Balance" valves, the valve shall be specified with ports and weld connections in the valve body for a bypass valve. At Ronald Reagan Washington National Airport, plug-type valves shall be Pacific Valves, Inc., model "Wedgeplug". Designers shall consider the need for small bypass valves for large isolation valves.

11.10.1.4 Butterfly Type Valves (Chilled Water and Hot Water Heating Service):

A. At Washington Dulles International Airport, butterfly valves shall have 416 stainless steel stem, full lug, cast iron body to permit removal of downstream piping, long neck body extended to allow for a minimum of 2" insulation, aluminum bronze disc, bubble tight EPDM seat, infinite position throttling, not less than Class 150, 20º F to 220º F range.

11.10.1.5 Sectionalizing Valves in Hydronic Distribution Piping:

A. Sectionalizing valves shall be provided in lengthy pipe runs to facilitate removing sections of piping from service without draining adjacent piping. Capability for tight shutoff shall be considered in sectionalizing valve selection and specification.

11.10.1.6 Direction of Closing: All valves shall be standardized to close when turned in a clockwise direction.

11.10.1.7 Valve Installation: For critical areas, a detailed area chart/plan shall be furnished and prominently displayed showing the location(s) of all new or revised piping and valves and sizes thereof. All valves, types, and location shall be indicated. All valves shall be identified (numbered) with metal tags (1½" x 5"), color coded, and labeled for identification purposes.

11.11 Controls

11.11.1 Energy Management and Control System: The energy management and control system (EMCS) shall incorporate operational sequences that are functional, user-friendly, and of proven reliable technology. All new controls shall match the existing controls type manufacturer. The controls shall be as manufactured and provided by Siemens Building Technologies, Inc. All sequences of operation, both text and graphics, shall be shown on the contract drawings as required in **Section III, Paragraph 9.1.6**. Generally, a two-way automatic control valve arrangement is preferred unless otherwise approved in writing by the Authority.

11.11.1.1 Ronald Reagan Washington National Airport Specific Requirements: Year-round automatic heating and cooling sequencing (without requirement for manual changeover) shall be provided. All power logic, elevators, escalators, moving walks, automatic doors, high/low alarms, uninterruptible power supplies are required to be connected to the existing airport Siemens Building Technologies, Inc. EMCS. Pneumatic operators shall be provided for automatic valves and automatic dampers except for exterior applications or where operators are provided in manufactured equipment.

11.11.1.2 Washington Dulles International Airport Specific Requirements: Pneumatic operators shall be provided for automatic valves and automatic dampers except for exterior applications, reheat valves for VAV

terminals or where operators are provided in manufactured equipment.

11.11.2 Pneumatic Control Tubing: All exposed pneumatic control tubing shall be seamless hard copper tubing. However, polyethylene tubing may be used up to a maximum length of 1' for final connection. Tubing installed, concealed above ceilings may be annealed copper. All pneumatic dampers and valves regardless of actuator size shall be provided with a gauge tee, petcock, and pressure gauge to indicate branch signal pressure.

11.11.3 Thermostats and Temperature Sensors: HVAC equipment for large public spaces in terminals and concourses shall be controlled by space temperature sensors that shall connect to the EMCS. All other tenant spaces and small public rooms shall be designed with the ability to independently control space temperature. Wall-mounted thermostats shall be located 4' – 6" above the finished floor level at suitable locations for sensing the average room temperature. Provide exposed thermometers, concealed adjustments, and lock boxes for all wall-mounted thermostats. Each temperature sensor and thermostat shall be labeled to assist the Authority maintenance personnel and the EMCS operator in identifying the corresponding EMCS equipment that is being controlled.

11.11.4 Carbon Monoxide (CO) Monitoring Systems: When required by code or as directed by the Authority, Carbon Monoxide (CO) Monitoring Systems shall be installed in accordance with the manufacturer's installation instructions. The proposed system shall be included no later than the 60% Design submittal. Design drawings shall include a sequence of operation for the system that includes any interface with other systems (HVAC, etc.).

11.11.5 Freeze Protection: Except where freeze protection is provided with a glycol solution, hydronic coils exposed to outside air shall have adequate freeze stat devices interlocked with the fan starter. Fan starters shall be manually reset. Provide interface with EMCS for alarm indication.

11.11.6 Variable Frequency Drives (VFD): Communications to VFD's controlled by the EMCS shall be via a Siemens compatible P1 interface. The P1 interface is a VFD manufacturer provided device that is designed to be P1 (a Siemens protocol) compatible. Determine sequence of operation and points of control. All EMCS points shall be via the serial interface, not hardwired. Use separate hardwired interface for safeties, damper end switches (where applicable), and damper open/close in VFD manual or override mode (when applicable).

11.11.7 Lift Station Pump Alarms: Where there are mechanical drawings and specifications covering EMCS, lift station pump alarm points shall be indicated on the appropriate mechanical drawings. EMCS input/output schedule shall include the alarm and status points from all lift stations.

11.12 Tests and Balance

11.12.1 General: The testing, balancing, and adjusting of the heating, ventilating, and air-conditioning systems shall be performed by an independent balancing agency not involved in the design or construction of the system. The balancing firm shall be a certified member of National Environmental Balancing Bureau (NEBB) or Associated Air Balance Council (AABC). All tests shall comply with certification agencies, standards and practices, and with the Authority start-up and operational test procedures. The documented results of all required tests shall be approved through the Authority designated construction representative from the Airport Engineering & Maintenance Department prior to acceptance of the project. All holes drilled for the duct traverses shall be properly sealed to prevent leakage of air. The difference between the actual balance and the design flow rates shall be acceptable whenever the tolerances as set forth by ASHRAE are not exceeded. The balancing Contractor shall provide labeling of set points for all devices, such as VAV boxes, circuit setters, notching of automatic damper rods to indicate blade position, etc.

11.13 Maintenance Accessibility

11.13.1 General: All mechanical and electrical equipment and related accessories shall be installed to provide sufficient access and space for ease of accessibility during maintenance operations or component removal or replacement. Accessibility minimum requirements shall not be less than manufacturer's recommendations. Access panels that are accessible by the public shall be provided with a cam lock preparation to receive a Best locking system.

11.14 Smoke Control/Smoke Removal System

11.14.1 General: When required by the Authority or USBC, a building/facility smoke control/smoke removal system shall be provided. All smoke removal systems shall be provided with the capability of manually activated smoke removal either by using the building air handling units or by providing a dedicated smoke exhaust system. The smoke control and smoke removal system design shall be based on minimum 6 air changes per hour. The smoke control and smoke removal systems shall meet the requirements of NFPA 92, NFPA 92A, and ASHRAE Handbook. Automatic activation of smoke control/smoke removal systems shall be provided where required by codes. For Authority requested systems (non-code required), activation shall be manual unless otherwise deemed necessary by the Authority. Where automatic operation is provided, a manual override feature shall be provided. A manual control panel for the smoke control or smoke removal system shall be provided at a location coordinated with the Authority Fire Marshal during the design. The manual smoke control or smoke removal panel shall be equipped with smoke control or smoke removal system zone graphics and instructions for manual operation. The manual operation shall be by a single toggle switch that shall sequence the smoke zone equipment operation by means of the EMCS control system. The smoke control panel shall be protected to prevent unauthorized use.

11.14.2 Automated People Mover (APM) Station Fire Load: The APM station smoke control system capacity shall be based on the greater exhaust requirement as calculated using the heat release and fire growth rate produced by the APM system vehicle combustible load or any other combustible material, but in no case shall be assumed as less than an 4 MW fire load for a train fire, or 1 MW fire load for a non-train fire such as a station trash fire.

CHAPTER 12 Plumbing

The A/E shall design all projects so that the work required in the Construction Documents incorporates all relevant requirements as set forth below.

12.1 Construction Documents

12.1.1 General: Plumbing Construction Documents shall include riser diagrams for the building water distribution, storm drainage, and waste and vent systems. The diagrams shall indicate total water supply fixture units (FU) and all main branches coming into and from the main distribution line including existing and future loads; total drainage fixture units (DFU) from all sanitary stacks, including existing and future that will be connected to the building sanitary drainage system; and the maximum projected roof areas (in sq. ft.) including existing and future to be drained into the storm sewer. Toilet rooms shall be shown by part plan at a scale no less than ¼" equal to1'.

12.1.2 Existing Utilities: When the A/E is designing connections to existing domestic water, sanitary sewer, and storm drainage systems the A/E shall verify that the existing Authority utility supply or discharge lines can meet the increased loads. A/E shall field verify the sizes of piping for the above systems. Existing drainage piping invert elevations shall be field verified to ensure that the existing infrastructure will allow a code compliant design. During the design the A/E shall provide calculations, including existing and future loads that demonstrate sufficient infrastructure capacity. Drawings shall indicate connection details.

12.1.3 Pipe Sizing: Water distribution and sanitary/storm pump discharge piping shall be sized to ensure that the maximum design flow velocity does not exceed 8 fps.

12.2 Backflow Preventers

12.2.1 Backflow Preventers - Potable Water: All potable water supply or distribution systems within the Airport shall be designed and installed to prevent contamination from any sources. The primary service connections (permanent or temporary) at buildings, facilities, special project sites, and construction sites, shall be provided with a reduced-pressure-zone type backflow prevention device to prevent backflow caused by backpressure and back-siphonage. Unless directed otherwise, provide Watts Model 909, Type RPZ (reduced-pressure-zone) backflow preventer at the primary service connection. Additional backflow prevention devices of various types and applications may be required downstream of the primary backflow preventer by building codes, health department regulations, equipment and fixture manufacturers, etc., and as dictated by the degree of hazard potential posed by the intended plumbing connection. If a service connection that is required to be fitted with a backflow prevention device is to be paralleled with second or more service connections for any reason such as, to supplement the capacity of the primary connection or for standby, each such direct connection to the primary supply shall also be equipped with a backflow preventer. Where approval is granted by the Authority to utilize potable water in fire protection systems, a backflow prevention device shall be required at the fire connections to the potable water supply. Watts Model 709 double-check backflow preventer is the only model currently allowed at such connections. Hose bibs connected to potable water systems shall be fitted with a vacuum breaker device.

12.2.2 Backflow Preventers - Non-Potable Water: Backflow preventers are not required on non-potable water systems (DFS - Dedicated Fire Water System) except where a cross-connection with a potable water system is specifically approved in writing by the Authority. Any such connection is discouraged and requires specific approval.

12.2.3 Backflow Preventers (BFP) - Installation: When service connections are made to a primary distribution water line and a RPZ type backflow preventer is required, tenants are required to install these devices in a readily accessible location so that the Authority or other maintenance personnel can access them quickly in the event of an emergency. This includes multi-tenant buildings, as well as terminals. Furthermore, since the RPZ backflow preventer device requires a drain, care should be

used in selecting a device location such that other tenants will not be affected by water damage. Water damage can result from a loss of pressure or a malfunction of the RPZ type backflow preventer device and its drainage system. Locations where backflow preventers are to be installed shall have adequate access for periodic inspection, testing and maintenance, and shall be shown on the floor plans. The primary service BFP shall be provided with an additional BFP installed in the bypass line around the primary service BFP to facilitate annual inspection and testing. Backflow preventers at water meter locations shall be installed horizontally after the OS&Y valve, down-stream of the water meter. Outdoor enclosures for back flow preventers shall comply with ASME 1060 per the IPC and shall not be installed in areas prone to flood. The contractor shall be responsible for certification of all backflow prevention devices at end of job. This is an Environmental Protection Agency (EPA) requirement and covered under the Clean Water Act. Certification shall be performed by an individual or a company certified to test such devices. Documentation of individual or company certification shall be provided to the Authority Engineering & Maintenance Department prior to installation.

12.3 Water Supply Valves

12.3.1 General: Water service lines shall be equipped with mechanical joint type gate valves manufactured by Mueller Company. Exterior valves, 2" and larger, shall be non-rising stem resilient seat gate valves, UL listed, FM approved and AWWA approved. All main and branch piping of water supply shall include the installation of isolation valves. A curb valve, commonly called a 'corporation cock valve' is not acceptable. All valves shall be standardized to close when turned in clockwise direction.

12.3.2 Interior Water Supply Valve: At Ronald Reagan Washington National Airport, water service lines inside the building shall be equipped with OS&Y valves for 2½" and larger.

12.4 Water Shutoff Valves

12.4.1 General: Water shutoff valves shall be installed on the water line to all fixtures, including water coolers, sinks and toilets. Valves ½" through 2" shall be bronze ball type valves with two-piece body and minimum class rating of 150. Valves 2½" and larger shall be gate valves, with a Class 250 rating.

12.5 Water Coolers

12.5.1 General: All water coolers shall be provided with shutoff valves and precast quick-change cartridge filters capable of removing suspended particles, odors, and dissolved gases. Where inlet water pressure varies more than 10 psig, install pressure-regulating devices. All water bearing materials shall comply with the Safe Drinking Water Act of 1986 and the Lead Contamination Control Act of 1988.

12.6 Floor Drains and Cleanouts

12.6.1 General: Provide floor drains and cleanouts in mechanical rooms, public toilet rooms, and kitchens. Locations of floor drains shall be coordinated in advance by the A/E to ensure adequate floor slope. Cleanouts shall be installed close to floor drains to assure access for cleaning pipes. All floor drains shall be installed with trap primers. Electronic trap primers shall be provided where water supply is not based on operation of toilet fixtures flush valves. The locations and types of all floor drains, cleanouts, and trap primers shall be noted on the drawings. Floor drain fittings shall be grouted and sealed to the floor slab. The cleanouts inside the buildings shall be installed at every 50'. Overhead cleanouts shall be avoided and shall not be installed in plenum spaces. In mechanical rooms the size of floor drains shall be a minimum of 3" and heavy duty when located in traffic areas. Mechanical Room floor drains for condensate connection shall be standard duty with funnel collector and located in non-traffic areas. An area floor drain shall be provided to accommodate fire suppression systems flow control valve test drain discharge. All floor drains located on levels above slab on

grade shall include all necessary precautions to ensure floor slabs are made watertight. A minimum 3' diameter waterproofing membrane shall be applied to slabs around and incorporated in the floor drain installations to prevent leakage to floors below. Provide floor drain waterproofing details on Construction Documents no later than the 60% Design Submittal.

12.7 Vent Pipe Cleanouts

12.7.1 General: A vent pipe extending from a double T-Y fitting that is not mounted over a toilet or urinal shall have a cleanout installed on the vertical vent to enable a direct vertical path to the vertical waste pipe below.

12.7.2 Air Admittance Valves: Air admittance valves are not acceptable.

12.8 Grease Interceptors

12.8.1 General: Grease interceptors shall be provided in commercial kitchens and/or bar facilities to remove grease waste prior to the discharge into the sewer system. A preventive maintenance and cleaning schedule shall be furnished as part of the Operation and Maintenance Data Submittal.

12.9 Oil Separators

12.9.1 General: All elevator pits, escalator pits, and moving walkway pits shall be provided with a sump pump where gravity drains cannot be installed. All storm or sanitary sewer system drains with a potential of oily fluids, hydraulic fluids and flammable liquid wastes shall be discharged into an oil separator before connecting into the building sanitary drainage system or other point of disposal. Oil separator location shall be accessible for maintenance by a cleaning truck from the building exterior. Vents from oil separators shall run independently of other vents through the roof. The size, type, and location of each interior and exterior separator shall be approved in writing by the Authority prior to the 60% Submittal. Civil, Architectural, Structural and Plumbing Drawings shall be closely coordinated to allow sufficient space for the oil separator and to ensure a passageway for oil separator removal and replacement. Performance specifications for this type structure are not acceptable.

12.10 Water Closets and Urinals

12.10.1 General: Water closets and urinals shall be a "Siphon Jet" wall-mounted type unless approved otherwise by the Authority.

12.11 Sensor Operated Flushometers and Lavatory Fittings

12.11.1 General: Sensor operated flushing systems shall be installed on all public toilets, urinals, and lavatories. Flush valves in public restrooms shall be automatic sensor controlled (12 VDC) with activation indicator lights and manual override mounted in the valve body and power wiring housed in vandal proof flexible tubing. Manual override shall work independent of the electronic actuator. Sensor range shall be 8" to 36". The Manufacturer for the flush valve and lavatory facet shall be Sloan. All sensor operated flushing systems shall be electrically powered from a standby power source. Flush valves and lavatory faucets in employee/private restrooms for water closets, urinals, and lavatories under the Authority maintenance responsibility, shall be manually operated. An access plate for servicing flush valves shall be provided.

12.12 Sewage Ejectors (Interior Building and Structures Application)

12.12.1 General: All interior sewage ejectors fall under the jurisdiction of Sewage Collection and Treatment (SCAT) regulations if flows exceed 2000 GPD.

12.12.2 Pumps: Sewage Ejectors (lift stations) shall be provided with duplex submersible sewage pumps equipped with an automatic alternator. A Quick Disconnect system shall be provided when pump pits are deeper than 4'. All sewage pumps 2" and smaller shall be grinder type. All sewage pumps 3" and larger shall be cutter type. Sump pits

shall be sized to prevent excessive pump cycling by providing a storage holding capacity a minimum of 2.5 minutes lead pump run time under peak flow. The minimum depth of the sump shall be 3' below the inlet pipe. The sewage ejector discharge piping shall be sized for a peak design flow of the duplex pump system. Cleanouts shall be provided on pump discharge piping. Rooms that house sewage ejectors shall be provided with a hose bibb, floor drain, receptacle, and ventilation that is exhausted to the building exterior. Where sewage ejectors are located in structures, such as tunnels, hose bibb shall be provided within 50 ft. from the sump pit to facilitate cleaning and periodic testing of the pumps.

12.12.3 Power, Controls, and Alarm System for Flows Exceeding 2000 GPD: Power, controls and alarms shall be arranged the same as for exterior lift stations - see the section titled "Sanitary Lift Stations - Exterior Applications" in Chapter 5 of the Design Manual.

12.12.4 Power, Controls and Alarm System for Flows less than 2000 GPD: Power controls and alarms shall be arranged in accordance with the following.

12.12.4.1 Pump Controls: Level sensing controls for the pump shall utilize an ultrasonic level sensor - Siemens HydroRanger 200 or approved equal. In addition, a backup float system consisting of a high level alarm float, a high level "pumps on" float and a low level "pumps off" float shall be provided. The high level and low level floats shall start and stop both pumps in case of failure of the ultrasonic sensor. Plans shall indicate the desired setpoints for the level sensor and the floats. For special situations where use of the ultrasonic sensor is not feasible (such as very small systems), other types of controls may be used, subject to approval of the Authority. The control panel shall be UL listed.

12.12.4.2 Alarm System: Provide as a minimum, "power failure", "high water" and "sensor failure" alarm with local alarm bell, silence button, and indicator lights. Local alarm is not required to operate on loss of power, however, alarm outputs to EMCS shall operate and shall not provide false indications upon power loss. Provide LED type "Power Available" indicator lamp. High water alarm level shall be set at a minimum of 2" below the inlet pipe elevation. Each of the above alarm signals shall be individually connected to the EMCS. The alarm points shall be shown on the documents which show the EMCS I/O points (usually the mechanical drawings).

12.12.4.3 Standby Generator: Where the lift station is not powered from a facility with redundant power feeds and power from a standby generator is available, and connection of the pumping system is practicable, provide power from the standby generator to the pumping system.

12.13 Sump Pumps (Interior Building and Structures for Storm Drainage Application)

12.13.1 Pumps: Sump pumps for interior storm water shall be duplex submersible pump wet well type equipped with an automatic alternator. A quick disconnect system shall be provided when sump pits are deeper than 4'. Sump pits shall be sized to prevent excessive pump cycling by providing a storage holding capacity with a minimum of 2.5 minutes lead pump run time under peak flow. The minimum depth of the sump shall be 3' below the inlet pipe. The sump pump discharge piping shall be sized for a peak design flow of the duplex pump system. Cleanouts shall be provided on pump discharge piping. Rooms that house sump pumps shall be provided with a hose bibb, floor drain, receptacle and ventilation that are exhausted to the building exterior. Where sump pumps are located in structures, such as tunnels, hose bibb shall be provided within 50 ft. from the sump pit to facilitate periodic testing of the pumps.

12.13.2 Control and Alarm System: Controls and alarms shall be arranged the same as for interior lift stations with flows less than 2000 GPD - see the paragraph titled "Sewer Ejectors (Interior Building and Structures Application)" in this chapter of the Design Manual.

12.13.3 Standby Generator: Where practicable, provide standby power in situations where loss of pumping would

cause flooding with resultant property damage or blockage of egress paths.

12.14 Valves On Pump Discharge

12.14.1 General: Each pump discharge shall be provided with gate and check valves. Gate valves 2" and larger shall have a minimum Class 150 rating. Check valves 2" and larger shall be spring loaded type with a minimum Class 150 rating.

12.15 Roof Drains

12.15.1 General: Roof drains shall be provided with Cast Iron Dome strainers. The minimum size roof drain conductors and leaders shall be 3 inches. Not less than two roof drains shall be provided in roof areas 10,000 sq. ft. or less. The Secondary (emergency) roof drainage system shall be roof drain conductors and leaders, not scuppers, on permanent facilities unless approved by the Authority in writing no later than the 60% Design Submittal. Primary and secondary (overflow) roof drains shall be located in the low points of the roof. Overflow roof drains shall be provided with water dam height not more than the maximum depth of ponding calculated by structural roof loads and be able to drain accumulated water on a roof when primary drainage system is blocked.

12.16 Water Heaters

12.16.1 General: Natural gas and electric water heaters shall be provided to generate domestic hot water for potable usage distribution and shall meet ANSI Z21.22 requirements. Water heaters shall be ASME rated commercial type, installed on housekeeping pads and shall be accessible for maintenance, servicing and replacement of all components. Drawings shall show water heater, piping arrangement, and details.

12.16.2 Water Heater Expansion (Compression) Tank: Storage tank water heaters shall be installed with an ASME rated expansion (compression) tank to control thermal expansion.

12.16.3 Recirculation Hot Water System: Where a hot water distribution piping to the most remote fixture exceeds 50', a re-circulating loop system with circulating pump shall be provided.

12.17 Wall Hydrants

12.17.1 General: Wall hydrants (exterior), self-drainable Type B, with integral non-removable hose-connection backflow preventer, shall be provided at ground level around the exterior perimeter of a building. Wall hydrants shall be located around the perimeter at approximately 150' spacing.

12.18 ROOF TOP HYDRANTS

12.18.1 General: Roof top hydrant shall be non-freeze hydrant type and shall not require an independent line for frost protection. The hydrant shall drain into an integral stainless canister located at a minimum of 1' below the roof substrate to prevent freezing. The hydrant shall be provided with a backflow preventer device. The inlet shall be ¾" diameter with an outlet capable of accepting a ¾"diameter hose thread. Show the hydrant location on plans and provide details indicating piping assemblies and pipe support system to demonstrate accessibility for maintenance.

12.19 Accessibility

12.19.1 General: Plumbing piping and equipment, including ceiling mounted devices, shall be coordinated with building construction, beams, other systems interferences, etc. to provide adequate working clearances and accessibility for maintenance. Clearances and locations shall be demonstrated graphically on the Contract drawings as early as practicable, but no later than the 60% Design Submittal.

12.20 Access and Accommodation for Future Equipment

12.20.1 General: The designated location for future equipment with piping layout, associated working clearances and maintenance accessibility shall be clearly identified on the Contract drawings as early as practicable but no later than the 60% Design Submittal.

12.21 Service Sinks

12.21.1 General: Minimum of one service sink shall be provided on each floor for all airport facilities unless directed otherwise by the Authority.

CHAPTER 13 Thermal Insulation for Mechanical and Plumbing Systems

The A/E shall design all projects so that the work required in the Construction Documents incorporates all relevant requirements as set forth below.

13.1 Pipe, Duct, and Equipment Insulation

13.1.1 General: Pipe, duct, and equipment insulation shall be suitable for the range of temperature, service, and environment to which they will be subjected. Insulation thickness shall be in accordance with the economic thickness standards published by the North American Insulation Manufacturers Association (NAIMA) and International Energy Conservation Code (IECC). Insulation material, finish, jackets, and accessories shall comply with all applicable Federal standards, ASTM and NFPA standards. Full-round insulation and special insulation inserts at pipe support-guides shall not only possess the required compressive strength, but shall also permit the pipe to expand and contract without stress or wear to the pipe or insulation.

13.1.2 Installation of Insulation and Accessories: Installation for the intended application shall be as recommended by the manufacturer of each type of mechanical insulation and accessories. Construction Documents must include an insulation application schedule tabulated or outlined to clearly identify for each service, condition, and location, the intended insulation type, thickness, vapor barrier type, jacket type, finish tapes, and accessories. All mechanical and plumbing piping insulation shall be protected with aluminum jacket in mechanical rooms, baggage handling areas, tunnels, utility corridors, parking structures, and also in other areas where insulation is exposed to physical damage. Aluminum protective jacket is not required in areas, other than as indicated above, where piping is installed above ceilings or where the invert elevation of the exposed piping is 10' – 0" or higher above the finished floor.

13.2 Refrigerant Line Insulation

13.2.1 General: Air-conditioning refrigerant lines shall be insulated with flexible elastometric cellular insulation, Armaflex or equal, a minimum 1" thick. All insulation joints shall be butted and glued with a manufacturer's recommended adhesive.

13.3 Insulation Requirements for Plumbing Piping

13.3.1 General: All water piping shall be properly insulated. Horizontal runs of roof drainage systems, exposed and concealed, including roof drain sump, sump connectors, and horizontal sloped connectors run to leaders shall be insulated. Sanitary piping in ceiling space used as air plenum shall be insulated to prevent condensation. All water and sanitary piping exposed to sub-freezing temperatures shall be properly insulated and electrically heat traced. When heat trace is installed, provide local monitoring, audible/visual alarm with silencing switch, and four additional dry contacts for future interfacing with a computerized facility automation system.

(This Page Blank)

CHAPTER 14 Utility Meters

The A/E shall design all projects so that the work required in the Construction Documents incorporates all relevant requirements as set forth below.

14.1 Utility Meters

14.1.1 General: Utility meters shall be installed on all utility services, including potable water, make-up water (cooling tower, heating/cooling systems), irrigation, natural gas, high temperature hot water, chilled water, and steam to monitor usage for accountability and billing purposes. Utility meter installations shall be limited to locations approved by the Authority and shall be accessible at all times. Meters shall be installed with adequate clearance to permit easy reading and maintenance. Refer to **Section III, Paragraph 20.6**, for the electrical service metering requirements.

14.2 Thermal Metering

14.2.1 General: Thermal meters shall be provided for all buildings that are connected to the Authority Central Plant high-temperature hot and chilled water distribution systems. The location of each meter shall be clearly shown on plans, schematic diagrams are not acceptable. All meters shall be installed so that they are accessible to the Authority personnel; installation of meters at high elevation is not acceptable unless approved by the Authority on a case-by-case basis. The location of thermal meters shall be coordinated with the Authority Engineering & Maintenance Department at each airport.

14.2.2 Thermal Metering

14.2.2.1 Buildings Other Than Central Plants at Ronald Reagan Washington National Airport: Thermal meters shall be Data Industrial, Model 2300. Each meter shall be equipped with a stainless steel, hot water type 0223 flow sensor with contact closure, pulse and 4-20 mA outputs for both heating hot water and chilled water applications. The thermal meter shall receive supply and return water temperature inputs from 10,000 ohm, 2-wire, platinum, DIN calibration curve thermistors. Thermistors shall be installed in stainless steel thermowells for piping mains and in tee mounted, stainless steel compression type fittings for branch piping with isolation valves. The thermal meter shall ultimately output a contact closure signal for BTUs and a 4-20 mA signal for flow (Gallons per Minute) to the Automatic Meter Reading Systems (AMRS). The installation shall include thermal meter programming and required cables, interface points, and programming for connection to the AMRS. The thermal meter shall be wall mounted at 5' A.F.F., in a hinged metal enclosure. The thermal meter shall be powered by 115 VAC, and provided with a keyed power switch at the enclosure unless the thermal meter is to be powered through a dedicated circuit breaker.

14.2.2.2 Thermal Metering at Washington Dulles International Airport: Coordinate thermal metering requirements at IAD with the Engineering & Maintenance Department. The installation shall include thermal meter programming and required cables, interface points, and programming for connection to the EMCS.

14.3 Tenants

14.3.1 General: When more than one tenant occupies a building, a separate meter shall be installed for each tenant leasing space directly from the Airport. Tenants leasing space directly from the Airport have the option of installing submeters for their sub-tenant or billing them on estimated usage. Where possible, a single location for multiple meters shall be considered. Refer to **DCA Volumes** and **IAD Volumes** for tenant thermal sub-metering requirements.

14.4 Food and Beverage Concessions

14.4.1 General: Meters shall be provided for each food and beverage concession unless permitted otherwise by the Authority in writing.

14.5 Natural Gas Meter Installation

14.5.1 Ronald Reagan Washington National Airport: Contractors shall arrange for the installation and metering of natural gas by the Washington Gas Company.

14.5.2 Washington Dulles International Airport: Where natural gas meters are required at Washington Dulles International Airport, provide meters in accordance with the latest Natural Gas Systems Design and Construction Manual for Washington Dulles International Airport, Metropolitan Washington Airports Authority. Construction drawings shall show the gas meter piping arrangement and detail.

14.6 Remote Reading

14.6.1 General: Meters shall have capability for remote reading.

14.7 Standard Meters

14.7.1 General: The A/E shall coordinate with Engineering & Maintenance Department at each Airport for the standard meter types and installation configuration to be used. The acceptable meter type and installation configuration shall be incorporated into the Contract Documents.

14.8 Domestic Water Meters - Building Service Entrance

14.8.1 General: A Badger Recordall, Turbo Series Utility type water meter shall be installed for 2" water service lines and above. The meter shall be installed according to manufacturer recommendations. A Badger Recordall bronze disc water meter shall be installed for under 2" lines. A Badger Read-o-Matic remote reader shall be installed outside of the exterior building wall in the event the Airport Engineering & Maintenance Department does not have direct access to the water meter. Water meter and backflow preventer (BFP) piping assemblies shall be located within 5' of the exterior building wall at the point of the water service entry in the heated space of the buildings or structures. Meter location shall be shown on the drawings (Plans and Details) and approved as early as practical, but no later than the 60% Design Submittal. Provide a permanent meter bypass pipe and valve to facilitate meter removal for maintenance or periodic testing without interruption of water service. Provide a strainer upstream of the meter and its bypass connection. The bypass fitting or any other obstruction in the pipe shall not be allowed within five pipe diameters upstream of the meter. Water meters shall read in gallons. Meters shall be installed horizontally for accuracy and permit easy reading. Meter location shall not be more than 5 feet above finish floor and shall not be located behind shelving, displays, or above dropped ceilings. Permanent installations require an RTR with remote or integral module AMRS. A telephone line hookup may be used with the Badger Access Plus AMRS. It is imperative that a submittal for review be approved by the Utilities Branch office prior to the procurement and installation of these automatic meter reading systems. Refer to **Chapter 22** of this section for requirements for communications conduit. Drawings shall show the water meter and BFP's piping arrangement and details including all necessary dimensions to demonstrate adequacy of space clearances and accessibility for maintenance.

CHAPTER 15 Fire Protection Systems

The A/E shall design all projects so that the work required in the Construction Documents incorporates all relevant requirements as set forth below.

15.1 General Requirements

15.1.1 General: In addition to those fire protection systems required by the Uniform Statewide Building code (USBC), fire suppression system shall be provided for all buildings. Buildings in which fire suppression systems will be installed shall comply with all Federal, State or local governing codes and regulations, including the Americans with Disabilities Act, insurance carrier requirements and any additional Authority requirements as specified in this manual. Fire protection system design shall be coordinated with the Authority Fire Marshal during design process. In existing facilities, installation of new, and/or modification of automatic sprinkler systems, special extinguishing systems or standpipe systems shall not be undertaken unless written permission is obtained from the Authority Building Code Department, Authority Engineering & Maintenance Department and the Authority Fire Marshal. If any requirements stated in this chapter are in conflict with the manufacturer's instructions for design/installation, the manufacturers' instructions shall be followed. The A/E shall be responsible for notifying the Authority, in writing, of all such circumstances as stated above.

15.1.2 General Design Requirements: Fire protection system design requirements shall be included in the construction documents. Fire protection system design drawings shall be provided in accordance with Authority procedures. Design drawings shall, at a minimum, include comprehensive floor plans (showing sprinkler head layout, Authority assigned room numbers, a sequence of operation matrix and other applicable fire protection system drawings (clean agent system, etc.), pipe sizes, valve and system test connections, etc.), riser diagrams, and details. When a fire pump(s) is included in the fire protection system design, the jockey pump and fire pump start/stop settings shall be included in the drawings. When a dry system or pre-action system is installed, the air pressure settings shall be noted on the drawings. Fire Protection symbols and abbreviations used on the drawings shall comply with NFPA 170, Fire Safety Symbols. Hydraulic Calculations shall be provided and shall be based on flow test data obtained by conducting a fire hydrant flow test or data provided by the Authority if current flow test data is already available. The A/E must adjust the flow test data and hydraulic calculations for any elevation differences and friction loss between the test hydrant and the water supply connection point at the base of the system riser, in situations where the flow test hydrant is not located near the building. A water supply curve shall be prepared based on the lowest water supply static and residual pressures. Pipe velocities shall not exceed 20 feet per second in all sprinkler systems. The A/E shall include the following requirements in construction documents:

15.1.2.1 Shop Drawings and Record Drawings: All fire protection shop drawings and hydraulic calculations shall be signed and stamped by a licensed Professional Engineer who is registered in the Commonwealth of Virginia. All fire suppression system shop drawings and calculations shall be prepared by an individual possessing at least NICET (National Institute for Certification in Engineering Technologies) Level III certification in sprinkler system design. Fire protection drawings and record drawings shall be produced using CADD systems and submitted to the Authority per the requirements of Division 01, found in Section II of this Manual. The drawings shall include all information as required for working plans. The drawings shall show the system as installed, including all deviations from the approved shop drawings. All shop drawings and record drawings shall include a sequence of operation matrix for the fire protection system being designed. The matrix shall also include all fire protection and life safety systems/components that will be interfaced with the fire protection system being designed. All fire alarm shop drawings and record drawings shall include the Authority assigned or otherwise approved permanent room numbers for the space/facility.

15.1.2.2 Pre-Work Meeting With Fire Protection System Contractors: Prior to starting work and after the Authority

Building Codes/Environmental Department has completed review and approval of fire protection system shop drawings, a meeting will be required between the contractor and the Authority Building Codes/Environmental Department. At this meeting the Authority Building Codes/Environmental Department will distribute approved shop drawings. Any comments that have been generated by the review process will be reviewed with the contractor at this meeting. This meeting will be scheduled by the COTRs upon notification by the Authority Building Codes/Environmental Department.

15.2 Fire Hydrant Flow Testing

15.2.1 General: The adequacy of the water supply shall be determined by the A/E for the Construction Documents and by the Contractor for the Shop Drawings by conducting a hydrant flow test in the vicinity of the facility for which the water supply data is required. This data shall be used by the A/E and/or the Contractor to design the facility fire protection system. The flow test shall be conducted in accordance with NFPA 291 “Recommended Practice for Fire Flow Testing and Marking of Hydrants”. The test hydrant used shall be located at the building site, whenever possible. All flow tests shall be coordinated in advance with the Authority Fire Marshal and the Utilities Services Division. Notice shall be given and approval obtained from the Authority Fire Marshal and the Utilities Services Division, at least three weeks prior to the requested test date. Copies of all flow test reports/results shall be forwarded to the manager of the Utilities Services Division at each airport and the Authority’s Program Design Engineering Fire Protection Group. A form for reporting hydrant flow test data is available at the offices of the Utilities Services Division

15.3 Water Supply Systems

15.3.1 Protection of Potable Water: The potable water supply at Washington Dulles International Airport is utilized for a combined fire/domestic services. All interior and exterior piping connected to the water system shall not only comply with the backflow prevention requirements described in **Section III, Paragraph 12.2 and International Plumbing Code**, but shall also be disinfected and tested in accordance with the Virginia Department of Health Waterworks Regulation and other applicable requirements.

15.3.2 Dedicated Fire Water System (DFS): At Ronald Reagan Washington National Airport and Washington Dulles International Airport, sectional valves in the Dedicated Fire Water System (DFS) lines shall be provided with supervisory switches when possible. At Washington Dulles International Airport, all sectional valves below grade shall be provided in valve boxes. Valve boxes shall be cast-iron with bottom section, top section and cover. Cover shall be provided with the lettering “DFS”. The bottom section base shall be sized to accommodate the valve base/diameter and to allow operation of the adjustable cast-iron extension rod length as required for depth of bury of the valve.

15.4 Fire Hydrants

15.4.1 General: Fire hydrants shall be installed in accordance with applicable codes/standards, and shall be located so that fire hose connected to the hydrant shall not impede streets, roadways, etc. A hydrant shall be located within 50' of every fire department connection for buildings within the AOA. Where fire hydrants are located proximate to hangars, terminals and other buildings, the fire hydrant location shall be identified with a reflective sign mounted as specified by the Fire Marshal. All hydrants must be UL-listed, AWWA, or FM approved and shall be color coded per the Post Fire Hydrant Color Code table below. Threads shall meet National Standard Thread requirements. Wall hydrants an in-ground flush hydrants requiring special wrenches shall be coordinated with the Authority Fire Marshal during Design. Refer to **Exhibits III-15-2, III-15-3, and III-15-4**.

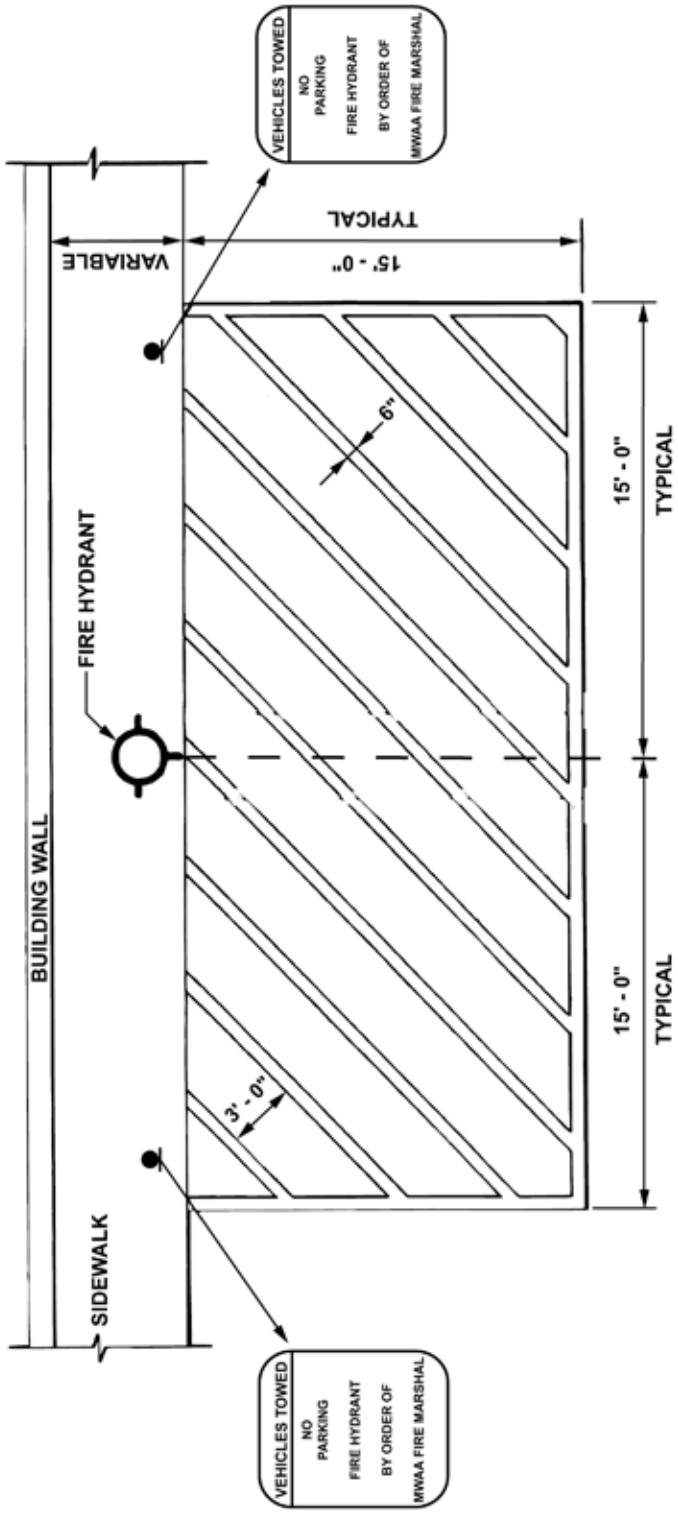

NOTE:

ALL FIRE HYDRANT STRIPING SHALL BE 6 INCHES WIDE.

ALL FIRE HYDRANT STRIPING ARE RED (A.O.A.), YELLOW (NON-A.O.A.), WITH REFLECTIVE MEDIA AS SPECIFIED.

THE ACTUAL STRIPING LOCATIONS SHALL BE FIELD DETERMINED BY THE COTR AND THE FIRE MARSHAL.

SIGNS SHALL BE RED LETTERING WITH WHITE BACKGROUND.

Fire Hydrant Access, Pavement Markings **Exhibit III-15-2**

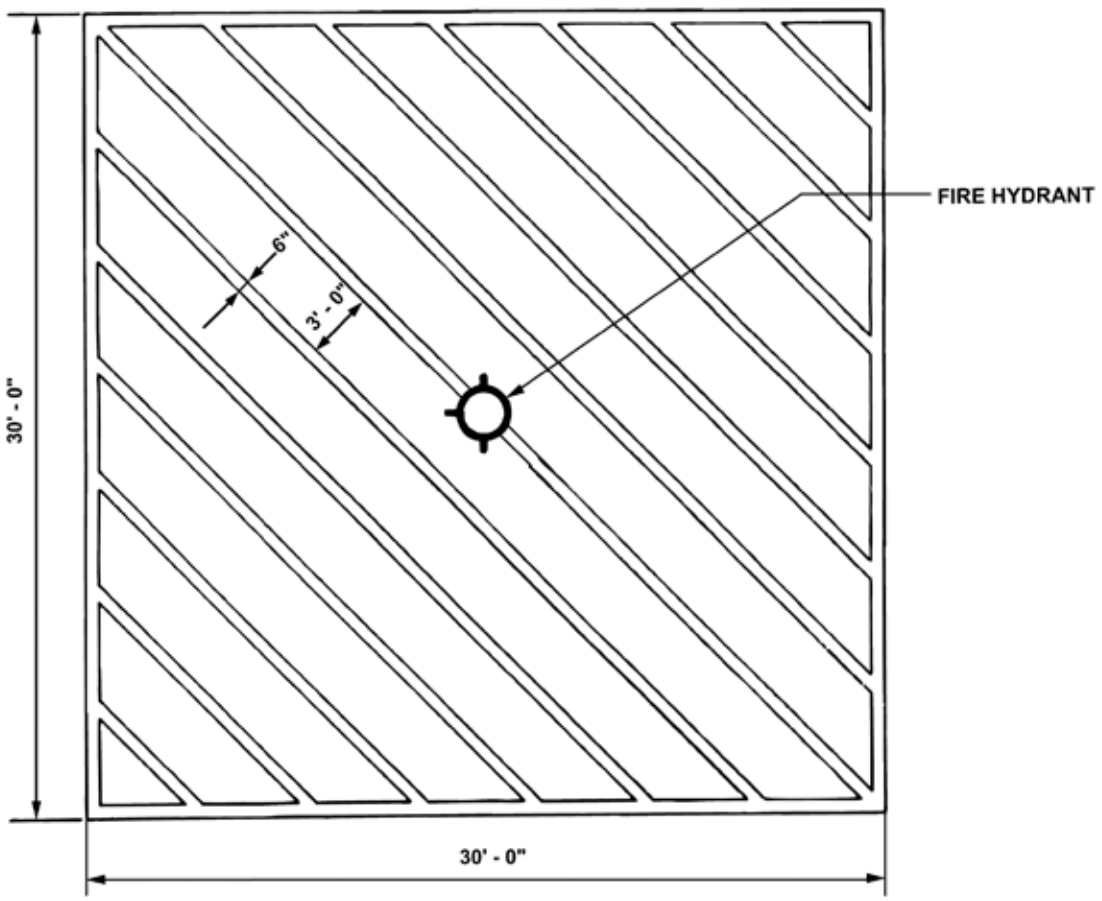

NOTE:

ALL FIRE HYDRANT STRIPING SHALL BE 6 INCHES WIDE.

ALL FIRE HYDRANT STRIPING ARE RED (A.O.A.), YELLOW (NON-A.O.A.), WITH REFLECTIVE MEDIA AS SPECIFIED.

Fire Hydrant Access, Pavement Markings Exhibit III-15-3

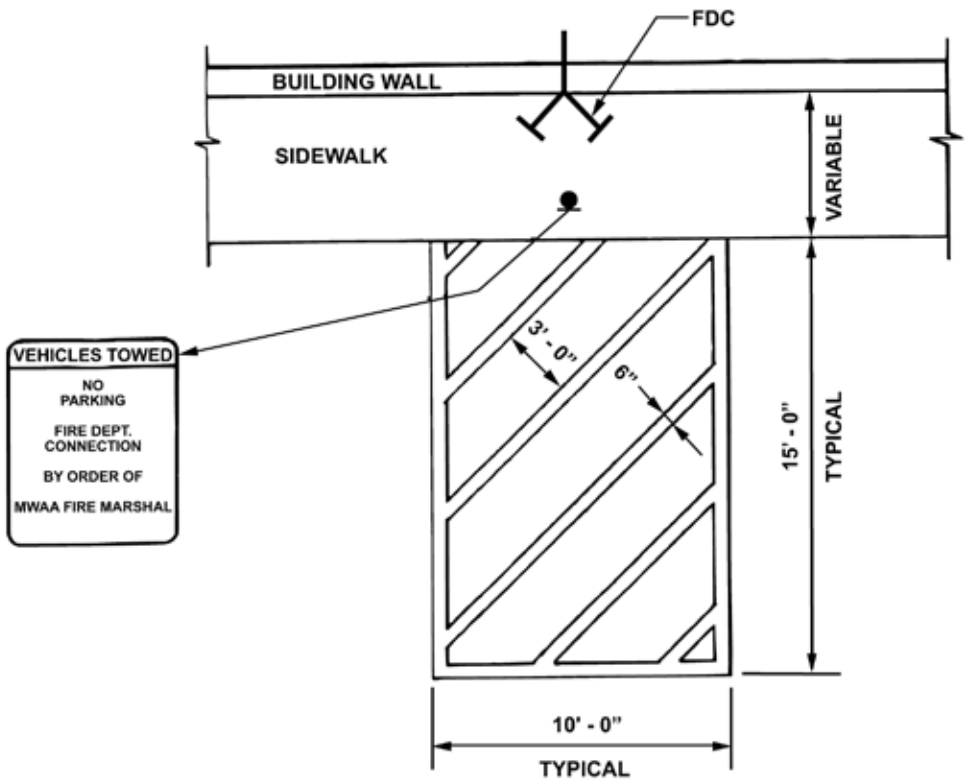

NOTE:

ALL FIRE DEPARTMENT CONNECTION (FDC) STRIPING SHALL BE 6 INCHES WIDE.

ALL FDC STRIPING ARE RED (A.O.A.), YELLOW (NON-A.O.A.), WITH REFLECTIVE MEDIA AS SPECIFIED.

THE ACTUAL STRIPING DIMENTIONS SHALL BE FIELD DETERMINED BY THE COTR AND THE FIRE MARSHAL.

SIGNS SHALL BE RED LETTERING WITH WHITE BACKGROUND.

SIGNS SHALL BE REFLECTIVE.

Fire Department Connection Access, Pavement Markings Exhibit III-15-4

15.4.1.1 Post Fire Hydrant Color Code Table:

POST FIRE HYDRANT COLOR CODE				
	Ronald Reagan Washington National Airport		**Washington Dulles International Airport**	
	Potable Water	**DFS Water**	**Potable Water**	**DFS Water**
Post Hydrant Body	Woodland Green (Duraclad #12-900-13)	Chinese Red (Duraclad #12-228-13)	Safety Yellow (PPG 6-308)	Chinese Red (Duraclad #12-228-13)
Post Hydrant Tops and Caps	White (Duraclad #12-003-13) Rated Flow (NFPA 291	Color Coded According with Rated Flow (NFPA 291)	Safety Yellow (PPG 6-308) Rated Flow (NFPA 291)	Color Coded According with Rated Flow (NFPA 291)
PIV Post Body	Chinese Red (Duraclad #12-228-13)	Chinese Red (Duraclad #12-228-13)	Safety Yellow (PPG 6-308)	Chinese Red (Duraclad #12-228-13)

15.4.2 Post Fire Hydrants (Ronald Reagan Washington National Airport): Fire hydrants shall be American Darling, Type B-62-B, or Kennedy “Guardian” (dry-barrel) traffic model with break away bolts, with a 1½" operating nut, two 2½" hose nozzles and a 4½" pumper connection.

15.4.3 Post Fire Hydrants (Washington Dulles International Airport): Fire hydrants shall be Mueller Company, Super Centurion Model, Series A-423, 3-way with two 2½" hose nozzles and one 4½" pumper connection with a 5¼" main valve opening. Fire hydrants shall include the Mueller Hydrant Defender System.

15.4.4 Flush-Mounted Fire Hydrants: Flush-mounted fire hydrants are generally not allowed at either Ronald Reagan Washington National Airport or Washington Dulles International Airport. At locations where post hydrants may interfere with airport operations, a flush hydrant may be installed with approval of the Engineering & Maintenance Department and the Authority Fire Marshal.

15.4.5 Wall-Mounted Fire Hydrants: Wall-mounted fire hydrants shall be mounted a minimum of 36" above level grade where possible. Wall-mounted hydrants shall have one 4½" pumper connection. The wall fire hydrants finish shall be chrome plated. The control valve stem shall be located to offer a convenient operation without interference to or by connected hoses, the grade below or other nearby fixtures.

15.5 Fire Suppression Piping, Valves and Accessories

15.5.1 General: Fire protection water piping, valves, and accessories shall be provided in accordance with NFPA 13, and with the following modifications or exceptions:

15.5.2 Pipe Size 2" or Smaller: Pipe size 2" or smaller shall be Schedule 40 steel, ASTM A53, A135, A795 with cast-iron fitting.

15.5.3 Pipe Size 2½" and Larger: Pipe size 2½" and larger shall be Schedule 40 steel, ASTM A53, A135, A795 with steel pipe fitting.

15.5.4 Pipe Size 6" and Larger: Pipe size 6" and larger shall be with nominal wall thickness of 0.134" for 6", 0.188" for 8" and 0.188" for 10"; ASTM A135 or A795; grooved ends, grooved-end steel pipe fittings, and grooved-coupling joints.

15.5.5 Floor Control Valve: In multi-level buildings, a floor control valve shall be provided at each floor level.

15.5.6 Deluge Systems: Galvanized steel pipe shall be used in deluge systems, dry pipe systems, and pre-action systems.

15.5.7 Plain End Joining: Plain end joining shall not be permitted.

15.5.8 Pipe Hangers: Pipe hangers, supports, clamps, etc., shall be UL-listed and FM approved.

15.5.9 Air Relief Valves for Dry Standpipe Systems: Manual dry standpipe systems shall be provided with automatic air relief valves to allow expulsion of air from the system when charged by the fire department. Air relief valves shall be a float operated, direct lever or compound lever design, capable of automatically releasing accumulated air in the system while it is in operation. The valves shall be installed in accordance with the manufacturer's instructions and in such numbers and orifice diameters to allow fire department apparatus to fill the standpipe system within 5 minutes or as otherwise specified by NFPA. Provide a shut-off valve to each air relief valve connection for maintenance of the air relief valve.

15.5.10 Pressure Relief Devices: Pressure relief devices shall be installed on all wet pipe sprinkler systems in accordance with NFPA 13 to prevent unintentional overpressure of the system piping.

15.6 Exposure of Sprinkler Piping

15.6.1 General: Sprinkler piping shall be concealed where a suspended ceiling exists in indoor spaces. Wet sprinkler piping shall be protected from freezing as needed.

15.7 Special Application Fire Protection Systems

15.7.1 Fire Suppression Systems in Elevators: Fire protection systems for elevators shall comply with the Authority Building Codes Manual, **Appendix 12** "Guidelines for Elevator Fire Protection Systems".

15.7.2 Fire Suppression Systems in Holding Cells: Holding cells, in addition to other applicable requirements, shall comply with the following:

15.7.2.1 Sprinklers Heads: Security/Institutional type sprinkler heads shall be provided in all temporary detention hold rooms, and cells.

15.7.2.2 Sprinkler Piping System: Any fire sprinkler system serving temporary detention hold rooms and cells shall be isolated from the building sprinkler system. The system shall be a pre-action type, activated by a smoke detector. A supervised isolation valve shall be provided for each hold room or cell zone, shall be located outside of the hold room or cell perimeter and readily accessible by emergency response personnel.

15.7.3 Fire Suppression Systems in Conveyor Areas: Fire suppression systems for conveyor areas and the facilities in which they are located shall comply with Authority insurance carrier criteria in addition to NFPA requirements.

15.7.4 Double Interlock Pre-action Sprinkler Systems: Double interlock pre-action sprinkler systems shall be provided in all APM Station Equipment Rooms (SER) and Power Distribution System Rooms (PDS) and other facilities as determined by the Authority.

15.7.5 Clean Agent Fire Extinguishing Systems: Clean agent fire extinguishing systems may be provided as a supplementary suppression system in Computer Rooms, Communications Rooms and/or rooms where the equipment is sensitive to water, equipment cost is extremely high and minimal down time is essential for airport continuity of operations. Rooms that are equipped with clean agent systems shall also be equipped with water suppression systems to protect the facility in the event that the clean agent fire extinguishing systems fails to extinguish the fire. System submittals shall include a cost benefit

analysis to justify its use and approval is required by the Authority on a case by case basis.

15.8 Portable Fire Extinguishers

15.8.1 General: Selection of size, type, quantity, and location(s) of portable fire extinguishers shall be in accordance with NFPA 10 and shall be coordinated with the Authority Fire Marshal early in the design phase. In publicly accessible buildings/areas, fire extinguisher cabinets shall be tamper-proof models that will discourage unauthorized removal of extinguishers and shall be equipped with tamper protection as specified by the airport Security Coordinator.

15.9 Fire Protection System Signs

15.9.1 General: Fire Protection system signs on buildings and structures for fire department sprinkler connections or standpipes or to identify fire hydrant locations shall be conspicuously placed at a height coordinated with the Authority Fire Marshal. The symbols used shall be in accordance with the Virginia Statewide Fire Prevention Code, unless otherwise specified by the Authority Fire Marshal.

15.9.1.1 Hydraulic Design Information Sign: A hydraulic design information sign shall be installed as required by NFPA 13. All information contained on the sign shall be "engraved" into the metal.

15.10 Final Acceptance Testing

15.10.1 New Systems: Testing shall be conducted in accordance with the applicable NFPA standard and as specified by the Authority.

15.10.2 Existing Systems: If an existing automatic sprinkler system is altered with the addition, reduction or replacement of twenty or more sprinkler heads, 10 or more pipe joints, or more than 20' of pipe, a hydrostatic test on the system shall be performed by the sprinkler contractor prior to the final acceptance.

CHAPTER 16 Fire Alarm Systems

The A/E shall design all projects so that the work required in the Construction Documents incorporates all relevant requirements as set forth below.

16.1 General Requirement

16.1.1 General: A complete and integrated fire alarm, detection, control, and monitoring system shall be installed throughout all airport facilities. The system shall be the "MXL" fully addressable and microprocessor/multiplexed based system manufactured by the Siemens Cerberus Company. For existing buildings that do not have the specified fire alarm and monitoring system, they shall be maintained to the standards of the Virginia Statewide Fire Prevention Code (SFPC) and the Uniform Statewide Building Code (USBC) under the provisions applicable to existing buildings. However, it is the intent of the Authority that, as buildings are renovated in part or in whole, a new fire detection and alarm system complying with Authority Design Manual requirements shall be installed. Over time, this will result in full airport coverage by the Siemens Cerberus MXL system. Every effort should be made to convert to the specified fire detection and alarm system within buildings in a cost-effective manner, either in a phased manner or by a single contract. Fire alarm system requirements for temporary facilities shall be established on a case-by-case basis in accordance with **Section III, Paragraph 7.2**. In existing facilities, installation of new, and/or modification of fire alarm systems or special extinguishing systems shall not be undertaken unless written permission is obtained from the Airport Building Codes, Engineering & Maintenance Department and the Authority Fire Marshal.

16.1.2 Codes and Standards: The fire alarm system shall be designed, installed, configured, programmed, commissioned and tested in accordance with the edition of NFPA 72, as specified in the USBC, airport insurance carrier guidelines, and in accordance with the manufacturer's specifications and instructions. If any requirements stated in this chapter are in conflict with the manufacturer's instructions for design/installation, the manufacturers' instructions shall be followed. The A/E shall be responsible for notifying the Authority, in writing, of all such circumstances as stated above.

16.1.3 General Design Requirement: Fire detection/alarm system design drawings shall include, at a minimum, Authority assigned room numbers for each room/space, the Authority assigned building number, a comprehensive system riser diagram; annunciator panel layout; input/output operating/mapping matrix, device schedules, the sequence of operation for every system interfaced with the fire detection/alarm system and all equipment/device locations. All drawing symbols shall be in accordance with NFPA 170, Fire Safety and Emergency Symbols. All work shall be performed in accordance with NFPA Standards, except where directed otherwise. All fire alarm system shop drawings and calculations shall be prepared by an individual possessing at least NICET (National Institute for Certification in Engineering Technologies) Level III certification in fire alarm system design.

16.1.3.1 Fire Alarm Message Format: All fire alarm device messages shall be formatted as follows: (device type) (Authority assigned building identification number) (Authority or tenant assigned room number)

Example: Smoke Building 2454 Room B-L1-136

16.1.4 The Authority assigned building identification number and room numbers shall be obtained from the Authority Staff Architect or Engineering Department at each respective airport. For non-Authority owned buildings, the tenant or owner shall be responsible for providing room numbers. The Authority shall provide a building identification number for non-Authority owned buildings.

16.1.5 Shop Drawings and Record Drawings: All fire alarm system shop drawings and calculations shall be stamped and signed by a licensed Professional Fire Protection Engineer who is registered in the Commonwealth of Virginia. Six copies of shop drawings shall be submitted. The Siemens Cerberus Division Custom Software Generator (CSGM) program shall be submitted on two disks, and the final approved CSGM shall be submitted on CD. Project Record fire alarm systems drawings shall be produced using CADD systems per requirements of Division 01, found in Section II of this manual. The requirements for CADD production of design documents are described in the volume entitled **CADD Design Standards**. The drawings shall also show the system as installed, including all deviations from the approved shop drawings.

16.2 Fire Alarm and Control Panel

16.2.1 General: The main fire alarm and control panel (FACP) shall be sized and configured to accommodate the proposed system plus a 50% expansion capability. FACP shall include all required operating modules and accessories. All FACP modules, components, and devices shall be of the manufacturer's latest version.

16.2.2 Minimum FACP Configuration shall include the following:

One (1), MPS-6 power supply
One (1), MKB-1 display annunciator module
One (1), MMB-1 central processing module
ALD-2I addressable input modules, as required
One (1), CMI-300 interface to NCC WAN module*
MOM-4 modules, as required
One (1), BT-34 battery
One (1), FPI-32 programmer
Ancillary control modules, mounting cages, enclosures, back boxes and other ancillary items as required. *Module is not needed for MXLR remote panels.

16.2.3 Small Projects: For smaller projects the use of the MXL-IQ shall be considered during the A/E design process.

16.2.4 FACP Requirements: The FACP shall provide power, annunciation, supervision, and control for the complete detection, alarm, and monitoring system.

16.2.4.1 Operate from a 3 wire 120 volt supply from an emergency source if available and be provided with internal 24 volt uninterruptible power supply (UPS) and back-up battery.

16.2.4.2 Transmit an alarm to the Authority Public Safety Communications Center.

16.3 System Components

16.3.1 General: Each component list shall be determined based on project requirements. Examples of system components are as follows (specific model numbers shall be provided in the specifications):

Microprocessor fire alarm control panel (FACP) with CSGM printout and operating matrix
Addressable "intelligent" manual stations, MSI-20 series
Addressable/programmable "intelligent" detection devices, FP or FPT-11 series
Horn/strobe alarm signals, HS-MC series with adjustable for multiple candela (cd)
Xenon strobe alarm signals, V33 Guardian Light TJ24d series with red lens color for clean agents and ATCT Cabs
Door holders with addressable interface modules, SDH series Intelligent Interface Module, TRI Intelligent Interface Module, TRI Series
Remote Command Center, RCC-1
System printer
Sprinkler flow tamper switches with individually addressable monitoring modules
Individually addressable interface modules for associated monitoring and ancillary control functions

16.4 System Configuration, Components and Installation

16.4.1 General: The A/E shall include and coordinate the requirements described herein with the Fire Alarm specifications. All field services, such as field assembly, connection of components, programming commission pre-testing, acceptance testing, and final adjustments of a system shall be supervised by a pre-approved factory authorized manufacturer's representative. Written substantiation of manufacturer's representatives' authorization and credentials shall be submitted in advance.

16.4.2 Audible Device Disabled: Provide audible/visual devices with the audible signal disabled in all public areas of terminal buildings. All audible and visual devices shall be wired on segregated circuits and demonstrated to operate automatically upon alarm activation during initial Acceptance Testing. The Audible devices shall then be disabled through MXL programming and the Visual devices shall be disabled through MXL programming from automatic activation but shall allow manual activation of the Visual devices by depressing a designated Function Key. Both features shall be demonstrated during acceptance testing.

16.4.3 Duct Smoke Detectors: Duct smoke detectors shall be provided per the USBC, the International Mechanical Code and as follows:

16.4.3.1 Duct smoke detectors shall be installed in return air systems with a design capacity greater than 2,000 cfm, in the return air duct or plenum upstream of any filters, exhaust air connections, outdoor air connections, or decontamination equipment and appliances.

16.4.3.2 Where return air risers serve two or more stories and are part of a return air system having a design capacity greater than 15,000 cfm, duct smoke detectors shall be installed at each story. Such smoke detectors shall be located upstream of the connection between the return air riser and any air ducts or plenums.

16.4.3.3 Upon activation, duct smoke detectors shall initiate shut down of the air distribution system. The duct smoke detector shall communicate a supervisory alarm status to the FACP.

16.4.3.4 Duct smoke detectors are not required in the return air system where the space served by the air distribution system is protected by a system of area smoke detectors provided that upon activation, the area smoke detectors shall shut down the air distribution system.

16.4.3.5 Where duct smoke detectors are not provided, area smoke detectors shall initiate shutdown of the air distribution system when a minimum of two area smoke detectors within a zone alarm. When an area smoke detector goes into alarm it shall communicate alarm status to the FACP. Upon alarm of a second area smoke detector the FACP shall activate modules to open fan motors contactors (safety circuits).

16.4.3.6 Air distribution systems that are part of an automatic smoke control system shall switch to the smoke control mode upon notification from the FACP.

16.4.4 Automatic Fire Detection shall be provided per USBC and as Follows:

16.4.4.1 Smoke Detectors:

A. In open areas over 900 sq. ft. on 900 sq. ft. spacing.

B. At intersections of major corridors over 30';

C. In corridors over 60' on 30' spacing.

D. In all workshops, storage and mercantile areas.

E. In elevator lobbies.

F. In other hazardous locations as required.

G. At top of all elevator shafts and in elevator machine rooms.

H. In spaces beneath raised floors and above suspended ceilings.

I. In spaces used as HVAC plenums.

J. In crawl spaces where electrical, power and communications cable is not readily accessible.

K. In Holding Rooms and Cells.

L. For aircraft loading bridges attached to buildings for the purpose of accessing aircraft directly from the building, the aircraft loading bridge cab smoke detector and any bridge-mounted pre-conditioned air unit smoke detectors shall be wired back to the nearest FACP and shall be capable of communication, whether through a TRI or otherwise, with the Siemens Cerberus "MXL" system as addressable and monitored components of that system.

M. In shell areas or buildings awaiting tenant fit out, ceiling detectors shall be provided with sufficient flexible conduit to eventually allow mounting on the finished ceiling.

N. Smoke and heat detectors shall have labels indicating the device designation. Numbers/letters shall be a minimum 14 point font size. Labels shall be placed on the detector so they are legible from floor level whenever possible.

O. Smoke and heat detectors are not to be installed in conveyance system areas (bag basements, etc.) where such devices will not be accessible for periodic maintenance/testing.

16.4.4.2 High Air-Movement Smoke Detectors: High Air-Movement Smoke Detectors shall be provided when the detector is located in the direct path of the airstreams of supply registers and plenums where airflows are greater than 300 fpm.

16.4.4.3 Linear Beam Smoke Detectors: Linear Beam Smoke Detectors shall be considered for locations where the use of other types of detection devices is not recommended, or the use of linear beam detection would be more economical. The A/E shall provide an analysis showing that the selection of this type of smoke detection is the best application for the structure and a cost benefit analysis.

16.4.4.4 Air Sampling Smoke Detection: Air Sampling Systems/Laser Detectors shall be considered for incipient fire detection:

A. In critical computer rooms.

B. In telecommunication centers.

C. In sensitive or high value equipment areas.

D. In areas where minimal down time is essential for airport operations.

16.4.4.5 Combination Smoke/Heat Detectors: Combination Smoke/Heat Detectors shall be used in applications such as in all electrical and mechanical rooms, and in all communications and utility rooms.

16.4.4.6 Automatic Linear Type Heat Detector: An automatic linear heat detection system may be used when it is decided to be the best application for a specific structure/hazard. The system shall be required to be addressable for the purpose of reporting to the Authority Public Safety Communication Center. The system is not required to have 'point specific' fire location reporting capability within the building or structure unless required by the Authority Fire Marshal.

16.4.4.7 Smoke Detectors for Door Release: Smoke Detectors for Door Release shall be used for doors that have been specified to close upon activation of a door

smoke detector. Activation of any detection/alarm device for the protection of an open area may close all smoke doors in the area of activation that are normally held open by a magnetic device.

16.4.4.8 UV/IR Detectors: Where deluge systems are required per NFPA 415 UV/IR detectors may be used to activate these systems.

16.5 Public Address system

16.5.1 Voice Public Address System Interface: Terminal buildings and public areas shall be provided with a Public Address (PA) System, which shall be configured as follows:

16.5.2 Public Address (PA) System: A Public Address (PA) System Panel and microphone station shall be installed in all Fire Control Rooms. The panel shall provide the capability of selecting public address zones individually, in any combination, or total building.

16.5.3 Notification Device Signaling Zones: The airport is divided into fire alarm notification device signaling zones. The public address system zones shall correlate with the audible/visual device signaling zones.

16.5.4 Broadcasting Pre-Recorded Messages: The Public Address System shall be capable of broadcasting pre-recorded fire emergency messages through an interface with the building fire alarm system. The pre-recorded fire emergency messages programmed into the fire alarm system shall be approved by, and coordinated with, the Authority Fire Marshal.

16.5.5 Timer Device: A timer device shall be provided as part of the Audible Address System that shall be programmable to activate the alarm message automatically after a time interval coordinated with the Fire Marshal.

16.6 Fire Alarm Annunciator Panels:

16.6.1 Location: The location of the Fire Alarm Annunciator Panels shall be coordinated with the Fire Marshal.

16.6.2 Functions: Each panel shall be capable of providing the same functions (such as, alarm annunciation, reset, voice communications, etc.) at each location.

16.6.3 Secured: Each panel shall be capable of being secured to prevent unauthorized entry.

16.6.4 Water Mist System Zone Switches and Control Panels: Water mist system zone discharge switches or mist system control panels (MSCP) shall be provided with an addressable monitoring interface module for interconnection with the fire alarm control panel (FACP), egress stairs pressurization fans, and the water mist system pump package(s) controller.

16.7 Other System Operation features

16.7.1 Fire Alarm for Elevators: Refer to the Authority Building Codes Manual, Appendix 12 and **Exhibit III-16-1** for schematic representation.

16.7.2 Ancillary Control Functions: Ancillary control functions, such as fire/smoke door release, elevator recall/capture, baggage conveyer shutdown, HVAC/fan shutdown, smoke control initiation, and special power shutdowns, shall be included in the design as required.

16.7.3 Interconnection to Security Air Operations Area (AOA): Interconnection to security Air Operations Area (AOA) doors to accomplish fire/security “fail-safe” operation.

16.7.4 Automatic or Manual Alarm: Signals shall transmit to the following locations:

16.7.4.1 Public Safety Communication Center (Printer).

16.7.4.2 All Fire Alarm Annunciator Panels within the Building.

16.8 System Wiring and Raceway

16.8.1 General: System wiring shall be Class “B” two-wire. Class “A” wiring may be required in some projects. “T-tapping”, terminal blocks and/or splicing shall not be allowed. Fire alarm conductors shall be solid copper. Stranded wire may not be specified. Wire installation shall be in strict accordance to manufacturer’s published installation recommendations and Article 760 of the NEC.

16.8.2 Minimum Wiring Size: Minimum wiring size for initiating circuits shall be AWG #16 or larger and for indicating circuits shall be AWG #14 or larger:

16.8.2.1 Positive Wires Shall be Color Coded: Red.

16.8.2.2 Negative Wires shall be Color Coded: Black.

16.8.2.3 Initiating and Indicating Circuits: Initiating and indicating circuits shall not utilize the same raceway unless the initiating circuit is shielded. No wiring other than that directly associated with fire alarm system shall be permitted in fire alarm raceways. All fire alarm system initiating devices shall be marked with a device address on both base and device. All fire alarm junction and pull boxes shall be painted red; all box covers shall be marked with the circuit numbers. All fire alarm system conduits shall be identified with red marking every 20'.

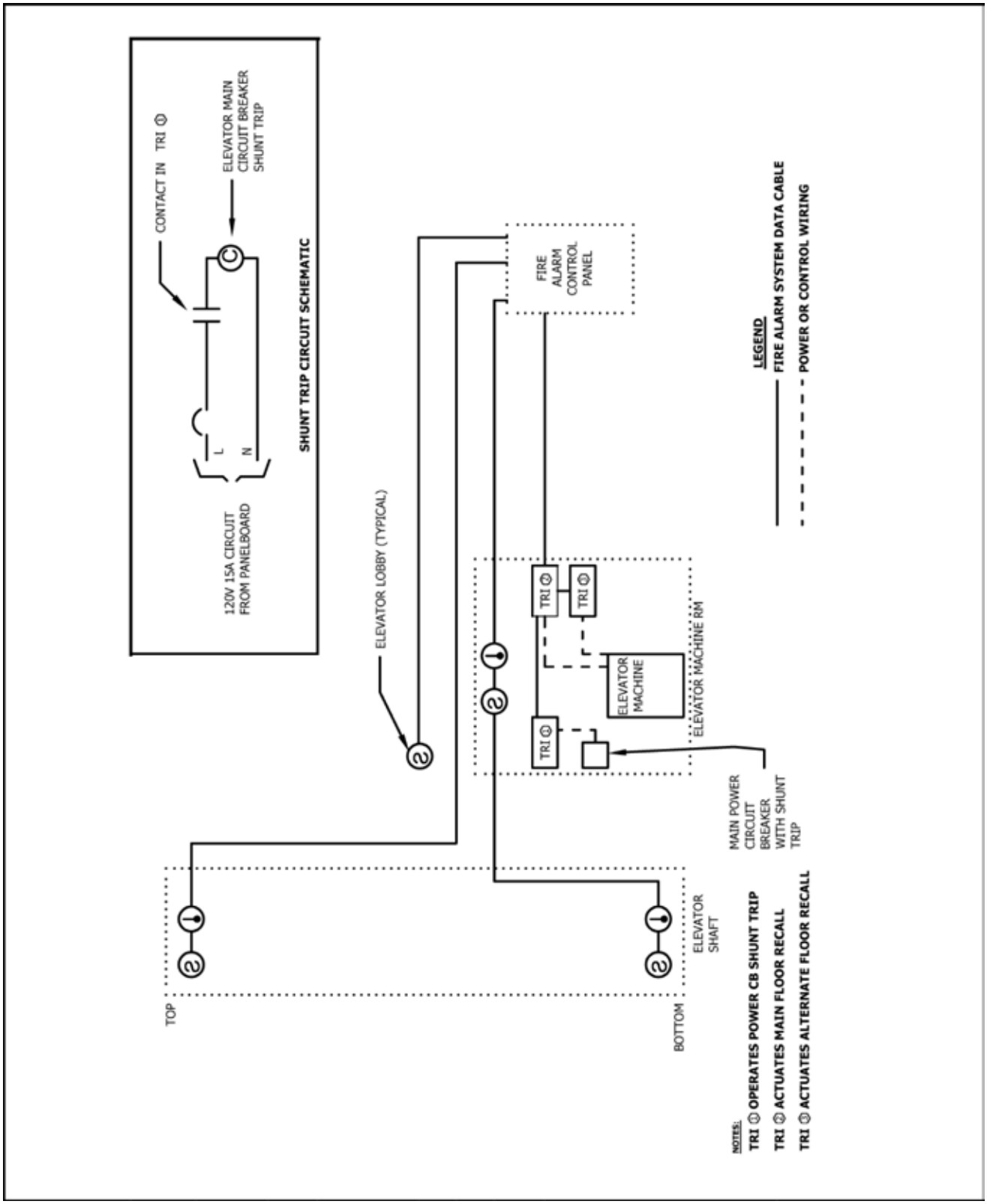

Fire Alarm System, Elevator Interface Exhibit III-16-1

(This Page Blank)

CHAPTER 17 Tunnel Fire and Life Safety Systems

This chapter established specific design requirements applicable to tunnel facilities. The A/E shall design all tunnel projects so that the work required in the Construction Documents incorporates all relevant requirements as set forth below.

17.1 Introduction

17.1.1 General: In addition to systems required by the Uniform Statewide Building Code (USBC), Authority tunnel facilities in which fire suppression, fire detection, life safety, and security systems are required shall comply with and be installed in accordance with all Federal, State or local governing codes and regulations, including the Americans with Disabilities Act, applicable standards, Authority insurance carrier requirements and any additional Authority requirements as specified in this Manual. The Authority Design Manual chapters covering engineering discipline guidelines shall apply within tunnels and shall be incorporated with tunnel chapter requirements. System design shall be coordinated with the Authority Fire Marshal during design process.

17.2 Definitions

17.2.1 Automatic People Mover (APM) Tunnels: Trainway tunnels utilized for movement of the APM vehicles.

17.2.2 Tug Tunnels: Tunnels utilized for the movement of baggage tugs and other similar types of aircraft service equipment.

17.2.3 Baggage Conveyor System Tunnels: Tunnels utilized for the movement of baggage via high speed conveyor systems.

17.2.4 Pedestrian Tunnels: Tunnels utilized for the movement of passengers only.

17.2.5 Roadway Tunnels: Tunnels utilized for the movement of roadway and service vehicles.

17.2.6 Utility Tunnels: Tunnels utilized for housing utilities, such as high temperature hot water and chilled water piping.

17.3 General Design for Tunnel Systems: Additional requirements for systems will be outlined within this chapter. A quick reference guide for Fire/Life Safety/Security systems that are required per tunnel is indicated in Table 17-1. The A/E shall use the reference guide in determining the type(s) of system(s) required for each type of tunnel. All design submissions shall be coordinated with the appropriate discipline chapter requirements for contract documents. If any requirements stated in this chapter are in conflict with the manufacturer's instructions for design/installation, the manufacturers' instructions shall be followed. The A/E shall be responsible for notifying the Authority, in writing, of all such circumstances as stated above.

17.4 Fire Protection Systems

17.4.1 Standpipe System (Conditioned Tunnels): Standpipe systems in conditioned tunnels shall be an automatic Class 1, wet standpipe system when temperatures inside the tunnels are maintained above freezing. Standpipe hydraulic calculations shall be provided with the system.

Table 17-1
Quick Reference Guide for Fire/Life Safety/Security Systems

Fire/Life Safety Systems	Automatic People Mover (APM) Tunnels	Baggage Conveyor System Tunnels	Pedestrian Tunnels	Roadway Tunnels	Tug Tunnels	Utility Tunnels
Standpipe System	X	X	X		X	
Fire Suppression System	X	X	X		X	
Fire Alarm Systems	X	X	X		X	
Portable Fire Extinguishers	X	X	X		X	X
Fire Fighters Emergency Telephone System	X	X			X	
800 MHz Radio System	X	X	X	X	X	X
Emergency Ventilation Control Systems	X	X	X		X	
Blue Light Stations	X					
Security CCTV System	X	X	X		X	X
Distance Markers	X	X		X	X	X
Emergency Call Box	X	X	X		X	x

17.4.2 Standpipe System (Unconditioned Tunnels): Standpipe systems in unconditioned tunnels shall be a Class I, manual dry-standpipe. Each manual dry-standpipe system main in a tunnel shall be provided with its own fire department connection at each end of the tunnel. The minimum design flow for the standpipe system shall be 500 gpm and the maximum fill time shall be 5-minutes. Fill time and hydraulic calculations shall be provided with the system design.

17.4.2.1 Air Relief Valves for Standpipe System: Manual dry standpipe systems shall be provided with automatic air relief valves to allow expulsion of air from the system when charged by the fire department. Air relief valves shall be a float operated, direct lever or compound lever design, capable of automatically releasing accumulated air in the system while it is in operation. The valves shall be located at the high points in the system as well as along the horizontal length of the piping. Air relief valves shall be installed on both sides of each isolation valve. Air valves shall be placed in such numbers and orifice diameters to allow fire department pumping apparatus to fill the standpipe system within 5 minutes. Air relief valves shall be specified to be installed in accordance with manufacturer's instructions.

17.4.2.2 Isolation Valves: Manual dry-standpipe system fire mains shall be provided with supervised manual OS&Y isolation valves at 300' intervals along the fire main to

isolate a maximum of two (2) fire valve hose connections at a time.

17.4.3 Fire Hose Valve Connections (FHV): FHV connections shall be installed at contiguous 150' intervals throughout the entire length of the tunnel. Distance marker signs shall be installed at each fire valve hose connection in accordance with Authority Design Manual requirements. Fire valve hose connections shall be installed at a height of 48" on center above the finished floor or walkway level. The first FHV from which the 150' intervals are measured shall be located not more than 20' from the tunnel entrance doors at the ends of the station platforms.

17.4.4 Fire Department Connections: Fire Department connections (FDC) serving tunnel fire suppression/ standpipe systems shall be installed at each end of the tunnel segment served by the system. A separate FDC and piping system shall be provided for each tunnel.

17.5 Water Supply System

17.5.1 General: At Washington Dulles International Airport the Dedicated Fire Water System (DFS) lines shall be utilized for tunnel fire suppression/protection system water supply, unless otherwise required by the Authority. If the fire suppression/protection system requires supply from a potable water system, the A/E shall provide written notification of requirement. Fire hydrants serving tunnel projects include post fire hydrants and/or wall-mounted fire hydrants connected to the DFS. Fire Hydrants shall be located at a minimum distance of 50' from the fire department connections serving the tunnels and tunnel stations. For DFS applications and type of fire hydrants provided for IAD refer to Section III, Chapter 15.

17.6 Fire Suppression Systems

17.6.1 Automatic Sprinkler/Standpipe System: An automatic sprinkler/standpipe system shall be provided along the length of all tunnels other than APM tunnels and in all tunnel support service rooms. The location of fire hose valve connections shall be coordinated with the Authority Fire Marshal. Hydraulic calculations for the sprinkler system including hose stream allowances shall be provided with the design. Hydraulic calculations shall be based upon the most current hydrant flow test data provided by the Authority Fire Marshal.

17.6.2 Double Interlock Pre-action System: When required by the Authority, a double interlock pre-action sprinkler system may be provided in the APM Power Distribution System (PDS) and equipment rooms. The A/E shall provide a comparison of fire suppression systems considered, a cost benefit analysis and written justification for Authority approval of pre-action system installation.

17.6.3 Tamper Switches: All isolation valves installed on any fire suppression system shall be provided with electronically supervised tamper switches.

17.6.4 High Pressure Water Mist System: A water mist system shall be provided at each APM station. The system shall be a four pipe (two-pipe ceiling/track), manually activated, high pressure, high velocity, single fluid and single liquid phase system. The system shall consist of six to ten fire suppression zones, as required by the length of the trainway glass tube enclosure and shall provide full-length coverage within the glass tube enclosure and extend 184' from each end of the glass tube enclosure into the tunnel. The system shall be capable of discharging two (2) zones simultaneously. The system shall be pressurized by high pressure pump packages and shall be provided with non-automatic open spray head nozzles capable of producing a maximum droplet size of 100 µm. Water mist system suppression zones shall be provided with manually activated deluge control valves to be open when a manually operated discharge switch, contained in the water mist system manual activation panel (MAP), transmits a signal to the water mist system control panel (MSCP). The system pipe and fittings shall be stainless steel.

17.6.4.1 Water Mist System Manual Activation Panel (MAP): Provide a MAP for remote activation of the water mist system at each APM station platform and in the corresponding Fire Control Room. Provide each MAP with

illuminated 2-position (On/Off) manual activation switches contained in a locked cabinet. The manual switches shall activate any of the mist system zones (up to a maximum of 2-zones) by manually turning the switch knob position from "Off" to "On". In addition manual switches shall be able to deactivate any of the mist system zones by manually turning the switch knob position from "On" to "Off". Provide the MAPs with an APM Station zone graph depicting each discharge zone. Each zone on the graph shall have an indicator light to verify zone activation. Each graphic panel shall be of distinctive appearance, clearly recognizable for the purpose intended, readily accessible at all times and installed with the bottom of the panel at no more than 4' above finished floor.

17.6.4.2 Water Mist System Control Panel (MSCP): Provide a water mist system control panel (MSCP) next to the MAP at each Fire Control Room. MSCP shall be networked with all MAPs throughout the APM station, the network command center control software package (NCCWAN), the Central control Facility (CCF) located at the AeroTrain Maintenance Facility (AMF) and the Alternate Central Control Facility (ACCF) located at Concourse B allowing activation from any one of the networked sites. MSCP shall be provided with addressable communication interface modules to allow opening and closing of the mist system zone sectional control valves (SCVs). The MCSP shall be a MXL panel to provide the capability to perform other control functions and to receive remote release commands independently from the FACP. As the MSCP receives an activation signal from the MAP it shall send signals to operate the Sectional Control Valve (SCV) of the activated water mist zone.

17.7 Portable Fire Extinguishers

17.7.1 Portable Fire Extinguishers: Selection of portable fire extinguisher size, quantity, and location in tunnels shall be in compliance with NFPA 10, Section III, Chapter 15 of this manual, and as specified by the Authority Fire Marshal. Portable fire extinguishers shall be provided at 150' intervals along the length of the tunnel, and when possible, coincide with the locations of fire hose valve connection.

17.8 Signs

17.8.1 Tunnel/Building Fire Department Connections (FDC): When Fire Department connections serving buildings, tunnels, and APM stations are grouped together, a single sign reflecting all systems shall be provided. The sign shall depict a "Fire Department Automatic Sprinkler/Standpipe Connection" in accordance with NFPA 170. The sign/symbol shall be 18" by 18" with retro-reflective, self-adhesive vinyl-faced aluminum with opaque red background and white retro-reflective graphic symbols. Sign shall be mounted on the wall at the centerline of the FDC grouping at least 15' above grade or as otherwise required by the Authority Fire Marshal.

17.8.2 APM Tunnel Standpipe System Identification Signs: Fire department connections serving APM tunnels shall be provided with retro-reflective, self-adhesive vinyl-faced aluminum identification signs. Each sign shall be 6" wide by 4" high. The signs' graphic presentation shall be white retro-reflective text and rules on an opaque red background. These signs shall be installed at each respective tunnel Siamese FDC, and shall indicate the system served by the FDC. The sign shall read: Train South Outer Loop; Train North Outer Loop; Train South Inner Loop; and Train North Inner Loop. See **Exhibit III-17-2**.

17.8.3 Fire Hose Valve Connection (FHV) Signs & Distance Markers inside Tunnels: Fire hose valve connections inside tunnels shall be provided with retro-reflective, self-adhesive vinyl-faced aluminum identification signs. Each sign shall be 24-inches wide by 12-inches high. The signs' graphic presentation shall be white retro-reflective text and rules on an opaque red background. The signs shall be broken into three message areas: FHV identification; distance, in feet, to the exit on the firefighter's left; and distance, in feet, to the exit station on the firefighter's right. An additional FHV identification sign is required and shall consist of two elements: tunnel loop identification; and the corresponding 100' station point, reduced to three (3) digits. Typical identification for the tunnel shall read: WO XXX – West Outer; WI XXX – West

Inner; EO XXX – East Outer; and EI XXX – East Inner. See **Exhibit III-17-1**.

REPRESENTATIVE FIRE HOSE CONNECTION SIGN, EAST INNER TUNNEL LOOP.

REPRESENTATIVE FIRE HOSE CONNECTION SIGN, EAST OUTER TUNNEL LOOP.

REPRESENTATIVE FIRE HOSE CONNECTION SIGN, WEST INNER TUNNEL LOOP.

REPRESENTATIVE FIRE HOSE CONNECTION SIGN, WEST OUTER TUNNEL LOOP.

Fire Hose Valve Connections (FHV) Signs for Tunnels Exhibit III-17-1

FIRE DEPARTMENT CONNECTION SIGN,
SOUTHBOUND OUTER TUNNEL LOOP.

FIRE DEPARTMENT CONNECTION SIGN,
NORTHBOUND OUTER TUNNEL LOOP.

FIRE DEPARTMENT CONNECTION SIGN,
SOUTHBOUND INNER TUNNEL LOOP.

FIRE DEPARTMENT CONNECTION SIGN,
NORTHBOUND INNER TUNNEL LOOP.

Fire Department Connections (FDC) Signs for Tunnels Exhibit III-17-2

17.9 Fire Detection/AlarmSystems

17.9.1 General: Provide a fully addressable, programmable, supervised fire detection/alarm system designed in accordance with the applicable NFPA standard, Section III, Chapter 16 and Chapter 17 Table 17-1.

17.9.2 Fire Alarm System Wiring: Class B wiring shall be provided for fire alarm systems in tunnels. All fire alarm conduits shall be two hour rated and brought to pull boxes as specified by the Authority.

17.10 Communication Systems

17.10.1 Fire Fighters Emergency Telephone System (FFET): An open circuit fire fighters emergency telephone system shall be provided. This open circuit system will allow multiple users from the Fire/Rescue Department (FRD) to communicate in underground structures during emergencies and facilitate command of the incident. An FFET unit shall be provided adjacent to each fire hose valve connection. FFET's shall be mounted at a height of 48" on center above finish floor or walkway level.

17.10.2 800 MHz Radio System: All tunnels and underground structures shall be equipped with the Authority's primary 800 MHZ head-end radio components to support transmission of a blended signal with MWAA, Fairfax County, Loudoun County, and interoperability public safety radio frequencies. Minimum alarm conduit size is nominal 1" diameter and in all cases shall conform to applicable standards/codes. In-line-directional amplifier (BDA) units shall include local battery capacity allowing at least one (1) hour of back-up operation at full load with the loss of primary electrical service. Typical radiating cable in the tunnels to be used should be 5/8" tuned for the MWAA 800 MHz radio system. The system shall also conform with the Airport Communications Systems Design Manual.

17.10.2.1 Radio System Installation Requirements: Radio equipment shall comply with Federal Communications Commission Parts 15, 22, and 90, pertaining to radiation limits and frequency use. Signal coverage shall be of service quality as defined by ANSI/TIA-TSB-88 Delivered Audio Quality (DAQ) 3.4 within the tunnels and APM vehicle cars. Active radio equipment components shall be compatible and integrated with the Aerial Facilities Limited Coverage Enhancement Management System (AFLCEMS). Grounding and bonding installations shall be per Motorola installation Standard R-56.

17.10.2.2 Radio System Labels: All 800 MHz components shall be labeled as indicated below at each BDA, at each antenna, and at intervals of no greater than 30' along each exposed SRS coaxial cable and alarm conduit.

MWAA RADIO
CAUTION
MA-630 703-417-3494 cable and alarm conduit.

17.11 Emergency Ventilation/Smoke Control Systems

17.11.1 Emergency Ventilation System: Tunnel emergency ventilation systems shall be adequate to allow clearance of smoke and to supply outside air to assist in the safe evacuation of passengers/occupants and to provide emergency personnel safer access. The emergency ventilation system design shall be in accordance with Section III, Chapter 11.

17.11.1.1 The emergency ventilation system shall maintain a steady airflow rate at a velocity designed to prevent back-layering of smoke in the direction of egress.

17.11.1.2 For APM tunnels, emergency ventilation system capacity shall be based on the heat release and fire growth rate produced, combustible load, or any other combustible material, but in no case shall be assumed as less than an 8 MW fire load for a train fire, or 1 MW fire load for a non-train fire such as a station trash fire.

17.11.1.3 Emergency ventilation systems shall be further capable of continuously reducing the carbon monoxide

(CO) level until completion of passenger/occupant evacuation.

17.11.1.4 Stair Pressurization fans shall be provided in all egress stairs connecting to tunnels. Egress stair pressurization fans serving tunnel egress stairs shall be interlocked with the APM station and/or APM tunnel emergency ventilation system. Equipment shall be located such that emergency egress from the fan room shall be possible via clear horizontal pathway with no equipment obstruction.

17.11.2 Tunnel Environment Simulation (TES): A TES computer program or a similar acceptable program as determined by the Authority shall be used to model and analyze various fire scenarios. The modeling shall demonstrate that during operation of the emergency ventilation system a tenable environment is maintained in the non-incident tunnel bore and along the path of egress.

17.11.3 Tunnel Ventilation Fan Room: Tunnel Ventilation Fan Rooms shall be sized to contain all of the required emergency ventilation fans, fan isolation dampers, sound attenuators, ductwork and other related system components. Fan rooms shall be of adequate size to allow ease in equipment maintenance and shall be accessible during the fan operation without going through the air plenums.

17.11.4 Tunnel Ventilation Shafts: The ventilation shaft shall positively exhaust smoke from the APM tunnel direct to the atmosphere without smoke migration into the areas adjacent to the ventilation shaft, particularly those used by the public or occupied by the tenants and employees. To preclude possibility of the smoke migration from the ventilation shaft into these adjacent areas, no direct or indirect opening between the ventilation shaft and adjacent areas should be provided. Maintenance access to the shaft shall be provided from the emergency ventilation fan room, or the ventilation shaft opening outside to the atmosphere. The configuration of the ventilation shaft shall provide smooth airflow in and out of the shaft and shall not impact performance of the ventilation system during the normal and emergency operation. The shaft design shall also prevent outside weather elements or other materials from entering into the tunnels.

17.11.5 Emergency Ventilation System Control: The APM tunnel emergency ventilation system shall be capable of being controlled remotely from the Central Control Facility (CCF), Alternate CCF, and Fire Control Room (FCR).

17.11.6 Emergency Ventilation System Local Control Operation:

The programmable logic controllers shall be located in designated rooms at each APM Station and Fire Control Room. Control sequences and the controller configuration shall be coordinated with and be approved by the Authority Fire Marshal.

17.11.7 Emergency Ventilation Component Design Requirements: Design of tunnel emergency ventilation system fan rooms, shafts, fans, fan system devices, fan motors, fan inspections, tests, fan isolation, draft relief and tunnel ventilation dampers, damper rated capacity, damper panel, damper operators, fan sound attenuation, etc., shall be as follows:

17.11.7.1 Fan System Devices: The fan system devices such as dampers, actuators, limit switches, and interrelated items required to maintain emergency ventilation airflows shall be structurally capable of withstanding the airflow impact during normal and emergency situations.

A. Fan-Motors: The fans shall be 100% reversible with exhaust mode being forward and the supply mode being in reverse operation. The fan-motors shall be equipped with factory-installed heaters to prevent condensation in the motor windings.

B. Performance and Sound Tests: A prototype fan unit having passed all the manufacturer's standard inspection and production tests shall be further tested for performance and Sound Power Rating. All tests

shall be performed in the forward and reverse direction according to an approved test procedure.

C. Radiographic Inspection: Each fan unit hub and blades shall be subjected to radiographic inspection.

D. Fan Impeller Over-Speed Test: Each fan impeller assembly shall be subjected to an over speed test at the factory of 125% of the maximum design operating speed for a minimum period of three minutes in each direction of rotation and shall be inspected to verify that the blades are not loose and the surfaces are without a defect.

E. Vibration Test: Each fan unit shall be subjected to a vibration test to see that the fan unit bearings are free of defects for fan operation in both directions of rotation.

F. Reversal Test: A prototype fan unit shall be subjected to a reversal test in the factory. The unit shall operate at the rated speed for a 30 minute time interval in each direction for each cycle. The fan unit shall undergo three cycles of successful rotation reversal. After completion of the three cycles, perform an additional two cycles of rotation for the reversal test allowing a 10 second time delay between the power interruption and re-energizing of the motor for reversal test.

G. Run-In Test: Each fan shall be operated continuously for a twenty-four hour period. The unit shall run for 12 hours in the forward (exhaust) mode and 12 hours in the reverse (supply) mode. Each unit shall coast for a period of five minutes prior to being started in the reverse direction. The motor windings shall not show any sign of overheating and the vibration amplitude shall not exceed the maximum recommended by the manufacturer.

17.11.7.2 Fan Isolation, Draft Relief and Tunnel Ventilation Dampers

A. Damper: The damper assembly frames and associated devices for each damper type shall be in accordance with NFPA 130.

B. Rated Capacity: The performance of the dampers at the rated capacity shall be in accordance with AMCA 500.

C. Damper Panel: Each damper panel shall be equipped with a single integral electric operator. All damper operators shall work in unison and shall be capable of driving the damper assembly open or closed under the required operating conditions.

D. Operator: The operator shall be capable of changing the damper position from fully closed to fully open or vice versa within a period of 10 seconds.

E. Limit Switches: Each damper panel shall be provided with two limit switches to monitor actual position (closed or open) of the damper.

F. Dampers and Damper Operators: Dampers and damper operators shall be readily accessible.

G. Tunnel Ventilation Fans Sound Attenuation: The fan and the sound attenuator manufacturers shall collaborate during design and testing of fans and attenuators to ensure that the attenuator/fan combined sound level shall not exceed 85 dBA when measured at a point, two tunnel diameters away from the centerline of the open tunnel ventilation damper and 5' above the walkway level.

17.12 Life Safety Systems

17.12.1 Emergency Call Boxes: Shall be located as specified by the Authority or other applicable code or standard. This device shall be push button activated for direct connection to the Authority Public Safety Communication Center.

17.12.2 Blue Light Stations: Shall be installed in accordance with NFPA 130.

17.13 Security Systems

17.13.1 CCTV System: Security system camera placement in tunnels shall be based on manufacturer's "performance criteria" and as specified by the Authority.

17.13.2 Cameras: Cameras shall be placed in a manner that achieves a vertical of field-of-view of 10 feet (based upon optical zoom capabilities, not considering digital zoom) throughout the camera's area of coverage. As an example, with the optical zoom at full magnification, the vertical field-of-view at the far end of the camera's coverage will not exceed 10 feet.

17.13.2.1 In order to minimize dead spots within camera coverage, cameras shall be placed such that the areas of coverage for adjacent cameras overlap.

17.13.2.2 Cameras shall be placed at both ends of tunnel crossovers to provide full coverage of these areas. Crossover cameras shall serve as the starting point for placing adjacent cameras.

17.13.2.3 Vertical rise and fall of the tracks, as well as any other visual obstructions, shall be a determining factor in the placement of cameras.

17.13.3 Zoom lenses: Zoom lenses field-of-view at its maximum zoom capability should display on the monitor at least a field-of-view of 10 feet of vertical picture.

17.13.3.1 Using the zoom lenses criteria, cameras then should be placed in such a way that these maximum fields-of-view should overlap when the cameras are looking at each other.

17.13.3.2 Crossovers have to have a camera to view this area and this location should be the starting point for the beginning of the camera placements.

17.13.3.3 Turns should utilize the overlapping field-of-view from the next camera as points of reference for placement of cameras.

CHAPTER 18 Fueling Systems

The A/E shall design all projects so that the work required in the Construction Documents incorporates all relevant requirements as set forth below.

18.1 Concept

18.1.1 General: The A/E shall ensure that projects requiring alterations or extensions to the fueling systems are reviewed by the airline fuel system management contractor responsible for operating and maintaining the airport fueling systems. Fuel piping shall be of steel construction and equipped with cathodic protection. When a butt weld cannot be made, all pipe couplings between new and existing underground fuel piping shall be Plidco "Weld+Ends" couplings, manufactured by Pipeline Development Company, 870 Canterbury Road, Cleveland, Ohio 44145 (Tele: 800-848-3333 or at www.plidoc.com). No substitutions shall be permitted. Hydrant fueling pits and hydrant system isolation valve pits shall be manufactured by Dabico, Inc., 2995 Airway Avenue, Costa Mesa, California 92626 (Tele: 714-545-7900 or at www.dabico.com). No substitutions shall be permitted. Hydrant fueling valves shall be Meggitt fueling valve Model 353 through Whittaker Controls, 12838 Saticoy Street, North Hollywood, CA 91605 (Tele: 818-765-8160 or at www.meggittfueling.com). No substitutions shall be permitted. Hydrant fueling electric motor operators shall be Rotork, Incorporated (www.rotork.com). No substitutions shall be permitted. Hydrant fueling leak detection shall be Hansa Consult North America Tightness Control System (TCS), 200 International Drive 12, Portsmouth, NH 03801 (Tele: 603-422-8833 or at www.hansaconsult.com). No substitutions shall be permitted. Hydrant fueling microprocessor-based controls shall be manufactured by Rotork, Incorporated. No substitutions shall be permitted.

18.1.2 Isolation Valves Installation, Location and Operation Requirements: When a single hydrant main is installed in an aircraft apron, the hydrant main shall be segmented with isolation valves installed at distances not to exceed 400-feet or located to isolate a maximum of two wide body aircraft parking positions, whichever is less. When the dual hydrant mains are installed, the isolation valves may be spaced 1,500-feet apart. The manually operated isolation valves shall be double block and bleed plug valves installed in either Dabico Pits or concrete valve vaults

18.1.2.1 Fuel Pit Shut-Off Valves: Provide appropriate ball valves in duel pits beneath the hydrant connector for shut-off for all new or re-work locations where the depth of the existing main permits. Butterfly valves are only accepted for retrofit or addition of pits where the existing mains will not accommodate the pits with the depth required. Ease of access for emergency shutdown shall be considered when determining valve depth. Valve shall be easily reachable without the use of tools or special devices.

18.1.2.2 High Point Vents and Low Point Drains: High point vents and low point drains shall be arranged with flanged ball valves, utilizing stainless steel dry disconnect. Dry disconnect coupler shall be accessible by normal operations without the removal of grates or the use of special tools. The banded pipe identification shall also be provided for piping within pits to identify high point vents, low point drains, and Nitrogen charges lines.

18.1.3 Flushing: All newly installed fuel piping shall be flushed in accordance with ATA-103.

18.1.4 Grounding: Fueling piping systems, including piping and components within fuel hydrant pits, shall be grounded per NFPA .

18.1.5 Codes and Standards: The system shall be designed, installed, configured, programmed, commissioned and tested in accordance with the following:

NFPA 30, Flammable and Combustible Liquids Code
NFPA 407, Standard for Aircraft Fuel Servicing
ATA-103, Standards for Jet Fuel Quality Control at Airports
And Requirements of the Environmental Protection Agency

The A/E shall also include the following statement in the Construction Documents: "Contractor shall adhere to O&I, IAD-6-2-2 in regarding the installation, modification, or alteration of any hydrant fueling system or components."

18.2 Emergency Fuel Shut-Off (EFSO) System

18.2.1 General: A complete Emergency Fuel Shut-Off System shall be provided which meets the requirements of NFPA 407. All integrated and operating EFSO alarm, detection, monitoring and control systems shall be microprocessor/multiplex based fully addressable, utilizing Siemens Cerberus Pyrotronics MXL system components.

18.2.2 General Design Requirement: The Authority considers the EFSO System an extension of the Fire Alarm System. As such the EFSO System shall comply with the requirements of NFPA and in particular the requirements of NFPA 72 series codes except as modified by this Manual. Separate EFSO System drawings shall be provided. Design drawings shall include, as a minimum, a comprehensive system riser diagram; layout plans; input/output operating/mapping matrix, and all equipment/device locations. All drawing symbols shall be in accordance with NFPA 170, Fire Protection Symbols for Architectural and Engineering Drawings. EFSO System shop drawings and calculations shall be prepared by a designer possessing as a minimum NICET (National Institute for Certification in Engineering Technologies) Level III certification in system design. All EFSO system Contractor provided shop drawings and calculations shall be sealed and signed by a licensed Professional Engineer registered in the Commonwealth of Virginia. Shop and Project Record (As built) drawings shall be produced using CADD systems. The requirements for CADD production of documents are described in **CADD Volume**. The drawings shall also show the system as installed, including all deviations from the approved shop drawings.

18.2.3 EFSO System Configuration: EFSO system configuration as a minimum shall consist of the following components:

EFSO control panel
EFSO signage
EFSO locator lights
EFSO strobe lights
EFSO manual pull boxes
TRI modules, wiring, terminations, mounting hardware and mast, enclosures, back boxes and other ancillary items as required.

18.2.3.1 Temporary Installations: For temporary installations, such as Aircraft Hardstands, non-addressable initiating devices may be utilized as long as their I/O points are uniquely identifiable to the MXL controller.

18.2.4 EFSO Control Panel: The EFSO control panel shall be a Siemens Cerberus Pyrotronics MXL with blue enclosure. The EFSO control panel shall provide power, annunciation, supervision and control for the complete fuel detection, alarm, and monitoring system. The EFSO control panel shall be configured to provide interconnection to the EFSO control panel at the Tower Control Cab (DCA) or Ramp Tower Control Cab (IAD), the Fuel Farm EFSO control panel (DCA/IAD) and the airport Central Station: NCC WAN (Network Command Center Wide Area Network) at East Building Electronic Shop (DCA), NCC WAN at Main Terminal MG-1 (IAD). The EFSO control panel shall operate from a 3 wire 120 volt power supply from an emergency source where available and be provided with internal 24 volt DC uninterrupted power supply (UPS) and back-up battery. EFSO (MXL) control panel configuration as a minimum shall consist of the following components:

1 MPS-6 power supply
1 MKB-2 display annunciator module
1 MMB-2 central processing module ALD-2I addressable input modules, as required
1 interface module for communication to NCC WAN MOM-4 modules, as required
One, BT-34 battery, and Control modules, mounting cages, enclosures, back boxes and other ancillary items as required

18.2.4.1 Circuit Protection: All initiating and alarming circuits shall be protected against power surges per manufacturer's recommendations.

18.2.5 EFSO Signage: Each EFSO manual pull station location shall incorporate EFSO signage that shall meet the requirements of NFPA 407, except that signs shall be bronze aluminum mounting frame, red with white border, with white letters 3" high and ½" strokes; temporary facilities (Handstands) 2". EFSO signage shall be designed to be mounted at a minimum height of 7 feet above the finish grade to bottom of sign. Final sign mounting height shall be approved by Fire Marshal prior to installation.

18.2.6 EFSO Locator Light: Each EFSO manual pull station location shall incorporate an EFSO locator light. The locator light shall be mounted to the facility or to a mast (site specific) with a nominal mounting height between 12' and 20' above finished grade. The final installation height shall be coordinated and approved by the Fire Marshal. The EFSO locator light shall incorporate a blue lens with long life light (75 watt min.) element and shall be maintained ON at all times.

18.2.7 EFSO Strobe Light: Each EFSO manual pull station location shall incorporate an EFSO strobe light. The strobe light shall be mounted to the facility or to a mast (site specific) with a nominal mounting height between 8' and 12' above finished grade. The final installation height shall be coordinated and approved by the Fire Marshal. The EFSO strobe light shall incorporate a blue lens with long life light element and shall be activated when the EFSO manual pull station is activated and be flashing until the system is reset.

18.2.8 EFSO Manual Pull Boxes: EFSO manual pull boxes shall be located per the requirements of NFPA 407. The manual pull box shall be mounted to the facility or to a mast (site specific) with a mounting height of 54" from box centerline above finished grade. Approved exterior type weatherproof covers shall be installed on all manual pull boxes.

18.2.9 EFSO System Wiring: EFSO addressable system wiring shall be Class B two-wire circuiting. Underground initiating and control circuit wiring shall be PVC jacketed, Type TC per UL 1277, Stranded copper, Class B with color coded THHN/THWN conductor insulation and a PVC jacket. Multiple T-tapping is allowed and end-of-line devices are not required. EFSO system minimum wiring sizes shall be as follows:

ALD initiating circuit wiring shall be TSP minimum #16 awg.
Indicating and control circuit wiring shall be a minimum #14 awg.
Line voltage circuits wiring shall be a minimum #12 awg.
Battery circuit wiring shall be a minimum of #10 awg.

18.2.9.1 EFSO System Raceway Enclosures/Junction Boxes: EFSO system raceway enclosures/junction boxes and covers shall be color blue. EFSO system wiring shall be color coded differently from other building system wiring. EFSO system ALD and CSM circuits shall have positive wiring color coded red and negative wiring color coded black. Transposing or changing color coding of EFSO system wiring shall not be permitted.

18.2.10 System Pre-Testing: EFSO system shall be pre-tested upon completion of the installation. The Contractor shall be required to align, adjust, and balance the system and perform complete pre-testing sequence to conform to the requirements of the contract drawings and specifications. Upon completion of the pre-testing the Contractor shall be required to provide a letter to the COTR certifying that the installation is complete and fully operable with copy of the completed pre-testing documentation attached. The Contractor shall be required to provide a minimum of five calendar days notice in writing to the COTR when the system is ready for final and formal acceptance testing. The Contractor shall be required to schedule final and formal acceptance test only after all required written certifications and test reports have been submitted and approved.

18.2.11 Final and Formal Acceptance Testing Protocol: EFSO system shall be ready for use, completely

operational and formally accepted at a minimum of 15 calendar days before fuel system usage is planned. The Contractor shall be required to have the presence of the manufacturer's authorized technical representative at all acceptance tests and re-tests. The formal system acceptance shall be in accordance with the procedures in USBC, NFPA, and the Authority testing protocol including a complete 100% operational test. Visual inspection of workmanship, number and placement of devices, and wiring methods, EFSO control panel operational testing, including power, supervision and device testing. All approved project submittals, drawings, a Custom Software Generator Message (CSGM) protocol fire alarm message document, sequence of operations document, specifications, certifications, test reports (results) and final Project Record Drawings shall be available at test locations.

18.2.12 Written Certifications and/or Test Reports: Six copies of certifications and/or test reports (results) shall be submitted by the contractor before final and formal acceptance testing is scheduled for the following:

18.2.12.1 Manufacturer's Latest Recommendations: Written certifications and test reports (results) shall confirm full compliance with the manufacturer's latest recommendations and NFPA for ALD wiring including:

A. Maximum line resistance.

B. Maximum line capacitance.

18.2.12.2 Written Certifications and Test Reports (Results): Written certifications and test reports (results) shall confirm full compliance with the manufacturer's latest recommendations and NFPA for CSM and MMB wiring.

18.2.12.3 Operating Instructions for the Test Model: Written certification and test reports (results) confirming full compliance with all tests listed in the manufacturer's recommendations for "Operating Instructions for the Test Model."

18.2.12.4 System Free of Ground Faults: Written certification and test reports (results) confirming the system is free of ground faults, short circuits and the absence of unwanted voltages between circuit conductors and ground as per manufacturer recommendations and NFPA 72.

18.2.12.5 System Checkout Procedure: Written certification and test reports (results) of complete system checkout procedure as per manufacturer installation recommendations and NFPA 72.

18.2.12.6 Final System Programming: Written report on final system programming, configuration and Custom Software Generator Program (CSGP).

18.2.13 Deliverables Due at Final and formal Acceptance Testing: Six copies of the following shall be provided.

18.2.13.1 Project Record Documents: Project Record Documents, including CSGP, as required by Division 01 specifications.

18.2.13.2 Wiring Index: Wiring and circuit coding index.

18.2.13.3 Project Record Wiring Diagrams: Project record schematic wiring diagrams of all EFSO MXL's, other control panels and annunciators, and any other ancillary equipment.

18.2.13.4 Operation and Maintenance Manuals: Operation and Maintenance Manuals as required by Division 01 specifications.

18.2.13.5 Spare Parts: All spare parts, components and equipment.

CHAPTER 19 Electrical Design Documentation Requirements

The A/E shall design all projects so that the work required in the Construction Documents incorporates all relevant requirements as set forth below.

19.1 Electrical Drawings

19.1.1 General: The A/E shall provide drawings per **Section II, Paragraphs 2.5 and 2.7**.

19.1.2 Lighting Information Requirements at 30% Submittal: At the 30% Submittal, the A/E shall submit a layout drawing that will show the proposed lighting levels, in each area, in footcandles, and a preliminary schedule with catalog cuts of each luminarie.

19.1.3 Site Plans: Site plans shall include demolition of existing electrical work and structures on the site, indicating any equipment to be reused or salvaged. The site plans shall provide duct bank and manhole plan and profile. They shall include the grounding plan for all substations and structures, the exterior lighting plan, and power plan indicating equipment placed on the site.

19.1.3.1 Site plan shall also show locations of all other utilities in the area of work other than electrical to avoiod accidents and provide better coordination.

19.1.4 Lighting Plans: Lighting plans shall include demolition plans of existing lighting and plans showing all new lighting, including switching and circuiting of the fixtures.

19.1.5 Power Plans: Power plans shall include demolition of existing electrical work, and wiring to new equipment and receptacles. The power plans shall show location of all equipment. Substations, electrical closets, and other equipment areas shall be scaled. These plans must also show wire and conduit sizes. Indicate circuit breaker or Motor Control Center (MCC) cubicle to which each circuit terminates.

19.1.6 Lightning Protection Plans: Lightning protection systems may be accomplished without the need for a complete set of plan sheets, by inclusion of the appropriate specification section. However, plans and details shall be provided (a) to cover any unusual conditions (b) where architectural or aesthetic issues dictate that the system be installed in a specific manner (c) where a path to route the conductors is not obvious, and (d) to show connection means and requirements.

19.1.7 Single Line Diagrams: Provide single line diagram according to the most current edition of IEEE Standards 141 and 241. A power riser diagram may also be required.

19.1.7.1 Include the following, as a minimum, on the Single Line Diagram: Equipment ratings; transformer connection symbols; short circuit ratings; relay symbols; fuse size and type; surge arrestor ratings; CT and PT ratios; ammeter and volt meter scales; motor horsepower; NEMA start size; shunt trips; breaker frame and trip sizes; long time trip ratings; equipment identification numbers; feeder sizes; conductor quantities; and Arc Flash categories.

19.1.7.2 Available Fault Current and Transformer **Grounding:** Each bus shall be labeled with available fault current. Show grounding of the secondary of all transformers, including cable and conduit sizes and specific ground electrodes that will be utilized to accomplish this grounding.

19.1.8 Lighting Fixture Schedules: Provide lighting fixture schedules. Indicate symbol, manufacturer, model, lamp type and quantity, mounting, and electrical requirements for each fixture type on schedules.

19.1.9 Panelboard Designations: Panelboards shall use the designation system shown below. Exception: For new

panelboards in existing buildings, the existing designation system may be continued.

Sample Designation: **E3LGC**

Prefix: [Blank] = Normal power panelboard
E = Emergency power panelboard
S = Standby power panelboard
L = Legally Required Standby Power panelboard (used at DCA only)

First Character: Substation fed from (always a Number

Second Character: Panelboard Type. Note that distribution panelboards are those which feed other panelboards, motor control centers, etc., and contain few or no branch circuits.

At DCA

H = Higher voltage branch circuit panelboard (480/277 VAC)
L = Lower voltage branch circuit panelboard (208/120 VAC)
D = Distribution panelboard, any voltage
MCC = Motor control center

At IAD

L = Lighting voltage branch circuit panelboard (480/277 VAC)
R = Receptacle voltage branch circuit panelboard (208/120 VAC)
D = Distribution panelboard, any voltage
MCC = Motor control center

Third Character: Floor Level where panelboard is Located (May be a number or letter; G is Ground Floor Level)

Fourth Character: Individual panel letter (A, B, C,..)

19.1.10 Provide Details, as a Minimum, for the Following:

19.1.10.1 Manhole Cable Racking and Splicing: Provide equipment arrangement plans and elevations to scale.

19.1.10.2 Elevations: Draw to scale:

A. Motor Control Centers (MCCs)

B. Substations

C. Switchgear

D. Switchboards

19.1.11 Controls: Provide schematic diagrams for controls which fall under the electrical division of the work.

19.1.12 Panel Schedules: Provide electrical panelboard schedules identifying panelboard rating (voltage, amperage, interrupting capacity, mains), total ampere and KW connected and demand loads, branch and feeder loads, and circuit breaker ratings on each schedule. Drawing sheets containing panel schedule shall have a list of the panel designations contained on that sheet in the lower right hand corner. Provide circuit schedule for each switchboard, motor control center and panelboard to be installed on the project. The Contract Specifications shall include the requirement that the Contractor submit, as part of the panel schedule submittal, a spreadsheet in the latest version of Microsoft Excel representing each panel.

19.2 Design Calculations

19.2.1 General: The A/E shall prepare calculations that show the available short-circuit currents at each bus and the voltage drop for each major cable run. The A/E shall

provide system load calculations for switchgear, switchboards, panelboards, and MCCs. The A/E shall provide product and photometric data sheets for all lighting fixtures specified in the design. Refer to ***Design Manual* Section II, Electrical Calculations Level of Completion**.

19.3 Electrical Studies and Testing

19.3.1 Short Circuit and Coordination Study: A/E shall include in the specifications, requirements for a short circuit and coordination study, to be provided by an independent testing agency. For minor projects, the A/E shall determine the need for either study, and document finding in the Design Report. The A/E shall modify the standard specification to conform to the project requirements. The following requirements shall be added to the standard coordination study specification:

> "Plots shall include the ground fault protective device settings along with the other overcurrent settings. Plots which include ground fault protective devices shall also include a typical 20 ampere downstream circuit breaker, and a sampling of other downstream devices, to show where coordination exists or does not exist between devices. Ground fault settings shall attempt to coordinate with downstream devices to the maximum extent practicable."

19.3.2 Electrical Equipment Testing Requirements: All major items of electrical equipment shall be tested in accordance with INETA standards, by an independent testing agency. The specification section for each item of major equipment shall indicate the specific NETA section which specifies the testing to be performed. The A/E shall determine the appropriateness of all components of the tests, and add or delete criteria, modify, or limit the standard test, as deemed appropriate. Testing specification for switchgear and switchboards shall require that the INETA standard for switchgear and switchboards have the section relating to inspection of bolted connections (subheading 1 titled, "Visual and Mechanical Inspection", item 7, in the 2003 standard), replaced with the following:

> "7.1.6. Inspect all bolted electrical connections for high resistance. Check tightness of all bolted electrical connections by using a calibrated torque wrench. Each bolt shall be individually tested and individually marked to indicate that it has been tested. Refer to manufacturer's instructions or NETA ATS for proper torque levels."

19.3.3 Electrical System Function Testing Requirements: For electrical systems with functions which are not adequately covered by the above standard tests such as control systems, the A/E shall determine and specify system tests required and the acceptance criteria. INETA section 8 "System Function Tests" shall be used as the basis of this requirement. The A/E shall reference a specific test code or procedure. If none is available, the A/E shall provide one of the following:

A. Provide and include in the specifications, a test procedure to verify proper operation of the system,

or

B. Provide and include in the specifications, lists of the functions that are to be tested, and require the testing organization to determine the appropriate testing procedures and submit them for approval.

19.4 Authority Standard Specifications and Drawings

19.4.1 General: The Authority has a number of standard electrical specifications and schematic drawings available. A/E shall obtain and use these Specification Sections where applicable. A/E shall edit the sections to suit the particular project.

The Specification Sections and the schematics that are currently available on the CD Version of the *Design Manual* are:

Section 260513: Medium Voltage Cable
Section 260553: Electrical Identification

Low Voltage Switchgear Automatic Transfer System with Closed Transition Switching Schematics

19.4.2 Additional Standards Specification Section: A/E is required to ascertain whether additional standard specification sections and/or schematic drawings are available during the design phase.

CHAPTER 20 Electrical General Requirements

The A/E shall design all projects so that the work required in the Construction Documents incorporates all relevant requirements as set forth below.

20.1 Distribution and Utilization Voltages

20.1.1 General: The following guidelines shall be used in the selection of utilization voltage for equipment, subject to the availability of the utilization voltage in the building affected.

20.1.2 Lighting

Fluorescent or HID**	277 V
Incandescent*	120 V
Transformer primary for	
Low voltage	120 or 277 V
LED*	120 or 277 V
Induction Lighting*	120 or 277 V

*Lighting Type is allowed only with written Authority approval.

**For small tenant areas, small outbuildings, and similar situations where it is not practical to provide 277 volts for lighting, 120 volt lighting may be used, subject to written Authority approval.

20.1.3 Heating

Above 5 kilowatts (KW)	480 V, 3 phase
Between 1.5 and 5KW	277V, single phase or 480V 3 phase
Less than 1.5KW	120 V, single phase or 277V, single phase

20.1.4 Motors

Motors 200 hp and above	480 or 4160 V, 3 phase
Motors 1 hp and above	480 V, 3 phase
Motors 1/2 hp and 3/4 hp	480 V, 3 phase or 120 V, single phase
Motors 1/3 hp and below	120 V, single phase
Controls	120 V

Motors furnished at 277 V single phase as an integral part of HVAC equipment are acceptable for all horsepower ratings.

Utilization voltage for fire pumps shall be approved in writing by the Authority prior to design.

20.2 Emergency and Standby Systems

20.2.1 Major Facilities: The requirements of this section shall apply to major facilities such as Terminal Buildings, Concourses, APM Stations, Utility Buildings, Water Pumping Stations, APM Vehicle Maintenance Facilities, etc. The specific project scope of work may provide additional requirements. The Authority may revise the requirements stated below to suit the needs of the particular project.

20.2.2 Emergency Electrical Systems: Emergency Electrical Systems (NFPA 70 Article 700) are those systems required to automatically supply power in the event of failure of the normal power supply, for illumination and equipment essential for safety to human life.

20.2.2.1 Emergency Loads: Emergency loads shall include, but not necessarily be limited to:

Emergency egress lighting
Security and intrusion alarm systems
Signage (egress only)
Communication systems (include airport public address systems)
Fire alarm systems
Fire suppression systems (see below)
Energy Management and Control System (EMCS)
Authority 800 Mhz Radio and Supplemental Radiating System (SRS)
Supervisory Control and Data Acquisition System (SCADA)
Emergency Fuel Shutoff System (EFSO)
Elevator cab lighting

Partial lighting in mechanical equipment, electrical, communications and fire control rooms
Receptacles as required by this *Design Manual* in electrical, communications and fire control rooms

20.2.2.2 Branch Circuits: Branch circuits supplying emergency power for lighting and receptacles in substation or switchgear rooms shall not supply emergency lighting in any public area. Equipment that is part of the emergency power system (other than noted above) shall not be located in substation/switchgear rooms.

20.2.2.3 Fire Suppression Systems: Fire suppression systems, such as deluge systems, CO2 extinguishing systems, kitchen hood fire extinguishing systems, etc., shall be supplied with emergency or standby power if it is available in the facility.

20.2.3 Legally Required Standby Systems: Legally Required Standby Systems (NFPA 70 Article 701) are those systems intended to automatically supply power to selected loads in order to prevent damage to the facility; to aid in rescue; fire fighting or evacuation. Legally required standby loads shall include, but not be necessarily limited to:

Sanitary drain sewage ejector (pump) systems (where code mandated)
Storm water drain sump pumps (where code mandated)
Smoke evacuation (where Code mandated) systems
Elevators (where Code mandated)
Security and Communications Systems Centralized UPS Units
Electrically operated faucets and flush valves

20.2.3.1 Hydraulic Elevators: refer to **Section III, Paragraph 7.17**.

20.2.3.2 Equipment: Equipment (transfer switch, legally required standby distribution switchboard, etc.) that is part of the legally required standby power system may be located in emergency distribution room or substation/switchgear rooms.

20.2.4 Optional Standby System: (NFPA 70 Article 702) The Authority, on a per project basis, will provide the A/E a list of loads that will be connected to the Optional Standby Power.

20.2.5 Emergency and Legally Required Standby Power Source: The emergency and legally required standby power source shall be diesel-fired generator. The A/E shall review manufacturer offerings and specify environmentally attractive units that produce low NOx and PMs Emissions. Design review submittal packages shall provide manufacturer equipment information sheets that specify emissions information and provide emissions comparisons to the manufacturer's standard equipment offerings. Critical type mufflers shall be specified for public facilities. The sound level measured at a distance of ten (10) feet from exhaust discharge shall be 85 dBA or less. The fuel supply system shall provide a minimum of 10 hours service at full load or maximum 800-gallon tank. Refer to **Section III, Paragraph 3.7** for tank requirements.

20.2.6 Standby Power: The following loads shall be provided with standby power in accordance with FAA publications:

Airport Control Tower, navigational aids, etc.
Airfield Lighting

20.2.7 Requirement: The requirement for standby power for fire pumps shall be determined individually for each case, as required by NFPA 20. The A/E shall make a recommendation that shall be submitted for approval of the Authority.

20.3 Energy Conservation In Electrical Systems

20.3.1 General: The A/E shall specify energy-efficient motors, transformers and lighting fixtures.

20.4 Equipment Rooms

20.4.1 General: All substations, switchgear, switchboards, transformers, and, in general, panelboards, shall be

installed in dedicated electrical rooms or closets. In special cases, such as tenant leased areas and areas with heavy concentration of electrical loads (kitchens, communications equipment rooms, etc.), transformers and panelboards may be located in other rooms or areas near the load served. Pipes shall not be routed through electrical rooms or closets. Pipes or mechanical ducts shall not be routed directly above electrical equipment. Electrical outlets and lighting in electrical rooms and electrical closets shall be connected to emergency or standby power, if available. Branch circuits supplying emergency power for lighting and receptacles in substation rooms shall not supply emergency lighting in any public area. Equipment that is a part of the emergency power system (other than lights and receptacles, as noted above) shall not be located in substation rooms. Each electrical room and electrical closet shall have at least one receptacle installed in it. All walls of electrical rooms and closets shall be painted a light color. Electrical rooms containing substations or switchgear shall be sized to provide clear space around the equipment of not less than 6'-0" in front and 3'-6" in the rear and at the ends. Adequate egress shall be provided for the installation and removal of equipment. Where columns are within the rooms, they shall not encroach on the required space around equipment. Electrical closets shall be provided in adequate quantity, size, and location to allow for top and bottom conduit entry and exit from the closet. Electrical rooms and closets shall be located central to the loads served. Space shall be provided in electrical closets for future conduit and equipment.

20.5 Equipment Pads

20.5.1 General: Floor mounted equipment such as switchgear, switchboards, motor control centers, and transformers, shall be placed on concrete pads. For switchgear and motor control centers, a pair of steel “C” channels shall be embedded in the pads. Channels shall be flush with or slightly above the top surface of the pad. Channels shall be level along their entire length, and front channel shall be level with rear channel. Location of channels shall be per equipment manufacturer’s recommendation.

20.6 Metering of Power

20.6.1 General: Each substation shall be provided with secondary watt-hour demand-meters. All watt-hour demand meters shall have digital readout and pulse output for future remote monitoring.

20.6.2 Ronald Reagan Washington National Airport Specific Requirements: The tenant shall provide watt-hour meters for tenant spaces. These meters shall be “E-Mon” brand. These meters shall be located in the Authority electrical closet. A spare 2" conduit shall be installed from each metering location to the nearest telephone closet. Metering at substation shall be Square-D Powerlogic system.

20.6.3 Washington Dulles International Airport Specific Requirements

20.6.3.1 Provisions for Tenant Metering: Provisions for metering of all tenants shall be provided. Provisions shall consist of routing the tenant feeder conduits through a current transformer cabinet located adjacent to the Authority electrical panelboard. A spare 2" conduit shall be installed from each metering location to the nearest telephone closet.

20.6.3.2 Metering and SCADA Interface at Substations: Metering and SCADA interface at substations shall be indicated below:

A. Substations with Closed Transition Transfer System: Substations shall utilize a Basler BE-1051 Numerical Relay as shown on the Schematic Diagrams. Substitutions shall not be permitted on this item. This relay shall provide metering, control, and SCADA functions, including, but not limited to: measurement of voltage, current, power, power factor, frequency, kilowatt-hours, and demand. Unit shall have the following additional features: 10baseT Ethernet port, fourth VT (sync check function 25), and Direct Access Virtual Control Panel. Connections to the relay shall be provided as shown on the schematic diagram.

A category 6 telecom cable shall be extended from the Ethernet port on each relay, to the nearest telecom closet.

B. All Other Substations: Metering and SCADA interface at substations shall be compatible with the Airport SCADA system, and shall utilize a Power Logic ION 7330 Digital 3 phase power meter, as manufactured by Square-D. Substitutions shall not be permitted on this item. For double-ended substations, a meter shall be provided in each side of the double-ended switchgear. Meter shall measure all of the following: voltage, current, power, power factor, frequency, kilowatt-hours, and demand. Unit shall have the following additional features: four optically isolated status inputs, two optically isolated RS485 communications ports, Modbus and DNP communications protocol. In addition, one meter in any group shall have an Ethernet port. An auxiliary contact on each main and tie circuit breaker shall be wired to the status inputs on one power meter. The transformer over-temperature alarm on each transformer shall be wired to a status input on the associated power meter. The RS485 ports on all meters shall be “daisy-chained” together. A category 6 telecom cable shall be extended from the meter with the Ethernet port, to the nearest telecom closet.

20.7 Electrical Requirements for Automated People Mover (APM) Tunnels

20.7.1 Provide standard 20A duplex receptacles, with weatherproof covers, at intervals of approximately 100'. Provide two circuits, and alternate the receptacles on the circuits. Embed receptacles and conduits in walls where practicable. Select wire size for maximum 5% voltage drop at farthest outlet with 10A load. Power to the receptacles shall originate from the emergency or the standby power system.

CHAPTER 21 Grounding And Lightning Protection.

The A/E shall design all projects so that the work required in the Construction Documents incorporates all relevant requirements as set forth below.

21.1 Grounding

21.1.1 General: Manhole cover frames and handhole cover frames, if metallic, shall be bonded to the equipment grounding conductor.

21.2 Equipment Grounding Conductor

21.2.1 General: A separate grounding conductor shall be provided in all raceway systems containing power circuits, including indoor lighting and receptacle circuits. The ground conductor shall be insulated and color coded green, sized per NEC requirements. A 4/0 ground conductor shall be provided with all power circuits over 600 volts.

21.3 Grounding Electrode System

21.3.1 General: Ground rods shall be ¾" diameter by 10' long of copper or copper clad steel. All underground connectors shall be made using exothermic welds or U.L. listed compression type connectors, and installed utilizing the appropriate tool as recommended by the manufacturer.

21.3.2 Washington Dulles International Airport Specific Requirements: Where rock is anticipated and the standard method of installation is not practical in the installation of ground rods, the rods shall be installed in a hole drilled into the rock. The rod shall be centered within the drilled hole, and the void space filled with a conductive grout designed for the purpose.

21.4 Lightning Protection

21.4.1 General: All permanent buildings and structures shall be provided with lightning protection. For stand-alone buildings, a U.L. Master Label shall be provided. For projects that are additions to existing buildings, the A/E shall determine the practicality of obtaining the Master label and shall modify the design documents accordingly. Lightning protection conductors shall be installed in conduit if routed inside buildings. All materials used expressly for lightning protection shall be copper, except where copper components cannot be used due to material compatibility requirements. In such cases aluminum materials may be used, but only for the connection to the incompatible material. On temporary buildings and minor additions, the A/E shall determine if the provision of lightning protection is warranted. In general, the protection systems shall be installed in accordance with these codes: Lightning Protection Institute 175, NFPA 780, and U.L. 96A. Where facilities are provided with lightning protection systems, main electrical feed(s) or service shall be provided with a surge arrestor that is listed under U.L. category “OWHX.”

(This Page Blank)

CHAPTER 22 Power Distribution

The A/E shall design all projects so that the work required in the Construction Documents incorporates all relevant requirements as set forth below.

22.1 Power Arrangement for Various Building Types

22.1.1 Terminals, Concourses, and Major Utility Building: In airport terminal, concourse, and major utility buildings, where anticipated load is 1000 kilovolt-amperes (kVA) or more, all secondary substations shall be double-ended secondary selective systems. This shall consist of two primary feeders, two transformer primary overcurrent protective devices, two transformers, and two sets of low voltage switchgear. Substations shall be provided with closed transition automatic transfer. The Authority will provide the A/E with schematic diagrams and other information on the automatic transfer system. The A/E shall review and revise the supplied information to suit the particular project requirements.

22.1.2 Other Facilities: In other types of facilities, such as offices, hangars, cargo buildings, etc., secondary substations shall be arranged as either a primary selective system or as a secondary selective system. A primary selective system would consist of two primary feeders, automatic (or manual where allowed) transfer equipment, transformer primary overcurrent protective device, a single transformer and a secondary main breaker. Non-loadbreak type selector switches shall not be used. Secondary selective systems for these types of facilities will not be required to meet the requirements indicated above for major facilities. The automatic transfer control system shall have the following features: Auto/manual selector switch, “incoming power available” lights for each line, and a preferred feeder selector switch. The control system shall sense voltage on all three phases of both lines. Potential transformers shall have fused primaries.

22.1.2.1 Manual Transfer: A manual transfer may be used, subject to prior written approval by the Authority, for secondary substations serving parking lot lighting only, or secondary substations serving minor facilities.

22.1.2.2 Single Feeder Allowed: In areas of the Airport that are currently equipped with only a single feeder system, connection to the single feeder may be allowed, with written permission of the Authority. However, provisions must be included for future addition of the second feeder and the associated transfer equipment.

22.2 Equipment

22.2.1 Primary Medium Voltage Overcurrent Protection: Where fusing is utilized for transformer primary protection, fusing shall be full range current limiting type. “Under oil” type fuses shall not be used. On substations, primary switches shall not be interlocked with the secondary main breaker. All bus shall be copper.

22.2.2 Transformers with Medium Voltage Primary: Transformers shall be delta primary. Transformer secondary shall be Y-connected solidly grounded, with neutral terminal. The transformers shall have adequate self-cooled capacity for 100% load plus 25% capacity for future growth. The temperature rise rating shall be 55/65ºC rise above 40ºC ambient for liquid-filled transformers and 115ºC for dry-type transformers. Liquid-filled transformers shall be supplied with liquid level gauge, pressure/vacuum gauge, and temperature gauge with alarm contacts. Transformers shall have lightning/surge arresters on the primary, on the load side of the disconnecting means. Winding material and internal bussing and connections shall be copper. Insulation for dry-type transformers shall be rated at 150ºC and 220ºC hotspot and shall be silicon or polyester resin type “VPI”. Dry-type transformers used in substations shall be equipped with a two-stage temperature-sensing device. The first stage shall activate forced air fans (if fans are provided), and the second stage shall initiate an alarm. For double-ended substations, the fan cooled rating at the higher temperature rise rating of the transformer is to be used in determining the load carrying capacity of the substation where one transformer is out of service. All cable connections to transformers shall utilize

compression type connectors where cables are #6 or larger.

22.2.3 Washington Dulles International Airport Specific Requirement: Transformers with medium voltage primary, shall be liquid filled type. Where liquid filled transformers are used in interior applications, specify transformer with factory supplied liquid containment pan. For applications where the use of liquid filled type transformers is not feasible, dry types may be used, subject to the approval of the Authority in writing.

22.2.4 Transformers - General-Purpose Distribution: General-purpose distribution transformers shall have adequate self-cooled capacity for 100% load plus 25% capacity reserve for future growth.

22.2.5 Low Voltage Switchgear: Secondary low-voltage switchgear shall be rated at 480 volts, 3-phase, 60 - hertz, and shall be free-standing, metal enclosed, drawout, ANSI type. The switchgear shall have a main circuit breaker on the secondary of each unit substation transformer. In general, loads of less than 600 amperes shall be served from distribution panels and not directly from the switchgear. A minimum of 20% spare circuit breakers shall be provided. All cubicles shall be complete, with buswork, rails, wiring, and circuit breakers. Rear (cable) compartments shall have full height metal barriers between each vertical section. All busses shall be copper. Where automatic transfer is provided, the secondary main breakers and tie breaker shall be electrically operated with manual and electrically operated trips. Feeder circuit breakers shall be manually operated. Where automatic transfer is not provided, all breakers shall be manually operated. Where ground-fault protection is required on main circuit breakers, it shall also be provided on feeder circuit breakers to provide selective tripping of breaker closest to the fault. The switchgear shall be provided with a digital power meter in accordance with the “Metering of Power” section of this document. The control power for low-voltage circuit breakers shall be 120 volts AC. Over-current devices shall have short-time, long-time, ground-fault, and instantaneous trip settings. Each incoming line shall be provided with over/under-voltage, and phase sequence protection. All cable connections to the switchgear shall utilize compression type connectors where cables are #6 or larger. Compression connectors shall be copper, two hole, and long barrel type.

22.2.6 Motor Controllers: Utilize a motor control center where there are more than two motors, rated at 480 volts, located in the same room. Motor control centers shall be located in the mechanical room where the majority of the controlled motors are located. Other locations may be considered with the written approval of the Authority. Only mechanical equipment loads shall be powered from motor control centers. Motor controllers serving motors of 25 hp and larger shall provide phase loss/phase reversal protection. All cable connections to motor control centers or to individual controllers shall utilize compression type connectors where cables are #6 or larger.

22.2.7 Panelboards (Power and Lighting): Panelboards shall have copper busses. Panelboard circuit breakers shall be bolt-in type. Panelboards shall have hinged front cover. Where single-phase power is supplied by a 3-phase source, the loads shall be balanced on each phase. Each 480/277V panelboard shall be provided with a minimum of 20% spare circuit breakers. Each 208/120V panelboard shall be provided with a minimum of 25% spare circuit breakers. All cable connections to panelboards (both incoming line and outgoing circuits) shall utilize compression type connectors where cables are #6 or larger. Mini Power Centers (combination transformer/load centers) shall be allowed only for special applications; generally exterior applications where only a few circuits are required. Use of Mini Power Centers will require written Authority approval.

22.3 Raceways

22.3.1 General: Raceway systems shall be provided for all wiring, except where other wiring methods are specifically allowed by the Design Manual.

22.3.2 Raceways - (Within Buildings): All conduits shall be installed parallel with the building features, except for

conduits that run in or under the slab. Where slab on grade thickness is 8 inches or less, conduits shall not be installed in the slab on grade. Conduits shall not be attached to box covers, except for ½" or smaller flexible conduit terminated on a flush mounted box cover. All conduits shall be marked every 150' indicating its use. All conduits shall be supported independent of other systems and equipment and shall be supported with approved devices (tie-wire is not acceptable). Conduit shall not be run exposed on top of roof surfaces.

22.3.2.1 Conduit Minimum Size: The minimum conduit size shall be ¾", except as indicated below:

A. At Washington Dulles International Airport, in facilities neither operated nor maintained by the Authority, including buildings at 44965 - 45045 Aviation Drive, 1/2-inch conduit may be used for interior work.

B. For flexible conduits or MC cable as indicated in following sections.

C. For final connections of devices which cannot accept larger conduits.

22.3.2.2 Rigid Galvanized Steel Conduits Shall Be Used:

A. In elevator shafts, all exterior areas, and other areas where physical damage is probable.

B. Where exposed within 8' of the finished floor level and continuing beyond 8' to the next nearest point of conduit support, with the following exceptions:

1) Where EMT descends vertically from overhead and the raceway terminates onto electrical equipment at an elevation of 6 feet or above, the EMT may continue down to the termination at the equipment.

2) Within communications equipment rooms, EMT may be used for all wiring.

C. All fittings shall be threaded.

22.3.2.3 PVC Schedule 40 or Rigid Galvanized Steel conduits shall be used:

A. Where run below concrete slab on grade.

B. Where run within concrete slab.

C. For stub-up out of floor into bottom of floor mounted equipment provided conduit will not be exposed.

22.3.2.4 Flexible Metal Conduits or MC Cable may be used:

A. Where conduit is fished in existing walls or through mullions, metal tubing, etc.

B. Where restricted space does not allow use of ¾" size, smaller sizes may be used, subject to written approval of the Authority.

C. Where flexibility is required, such as connections to motors (maximum length shall be 18").

D. For fixture “whips” to recessed lighting fixtures (minimum size ⅜").

E. When used in wet or damp locations, liquid-tight flexible metal conduits shall be used. The above length and size restrictions shall still apply.

F. Where flexibility is required, such as, connections to motors (maximum length shall be 18") or connections to control devices (maximum length shall be 18 inches, minimum size shall be ⅜").

22.3.2.5 Electrical Metallic Tubing: Electrical Metallic Tubing may be used where allowed by code in all other interior spaces. All fittings used with EMT shall be compression type. MC cable may be substituted for EMT in some instances, and will be subject to the approval of the Authority.

22.3.2.6 Steel Modular Raceway may be used:

A. In offices, laboratories, and similar applications where appropriate.

22.3.2.7 Underfloor Raceway may be used:

A. At ticket counters, inspection counters, offices, and similar facilities.

22.3.2.8 Cable Tray may be used:

A. For communications and control wiring.

B. For racking medium voltage cabling (subject to the written approval of the Authority).

22.3.3 Ronald Reagan Washington National Airport Specific Requirement: Rigid conduit shall be used in machine/mechanical rooms, electrical vaults, shop areas, and industrial areas.

22.3.4 Raceways (Within Buildings) for Circuits over 600V ("Medium Voltage")

22.3.4.1 Where practicable, running of medium voltage circuits within buildings or tunnels shall be avoided. Where medium voltage circuits must be run within a building or tunnel, encase the raceways within the concrete structure of the building, or enclose within a concrete or block chase.

22.3.4.2 Where encased in concrete, conduit shall be PVC Schedule 40 or rigid galvanized steel. Conduits shall be minimum 3 inches from the concrete surface. The exposed surfaces of the concrete encasing the conduits shall be painted red, with a warning message stenciled onto the concrete at 10 foot intervals. The warning message shall read “Danger High Voltage Conduits. Do Not Cut or Drill.”

22.3.4.3 Where within a chase, conduit shall be rigid galvanized steel.

22.3.4.4 Within electrical rooms, rigid galvanized steel conduit may be run exposed.

22.3.5 Raceways - Underground: All underground conduits shall be PVC or rigid galvanized steel (RGS). PVC conduit shall be Schedule 40, minimum. Type EB may be used for major ductbank installations with Authority approval in writing during the design but not later than 60% Submittal. Rigid steel conduit must be coated with asphalt paint or PVC coating when direct buried. Conduits shall be concrete encased when buried underneath roadways or when used for medium-voltage; encasement may be omitted when jack-and-bore techniques are used, but the casing must be left in place. For purpose of application of this paragraph to parking lots, only the bus routes within a parking lot shall be considered as roadways. Minimum size for conduits used for medium voltage shall be 5", unless a smaller conduit with a specific use is identified no later than the 60% design submittal and approved in writing by the Authority. In airfield installations, 4” conduit for medium voltage may be used if approved in writing by the Authority no later than the 60% Design submittal. Generally, conduits serving exterior pole-mounted lighting fixtures shall be 2" in size. Marking tape indicating “Electrical Cable Buried Below” shall be installed in accordance with **Section III, 4. 10 “Underground Utility Marking”**. All empty ducts shall be provided with a ⅛" minimum diameter nylon dragline for pulling future cables. Prior to pulling cable into any conduit (whether new or existing), the conduit shall be cleaned with a wire brush ½" larger than the duct and rodded with a mandrel ¼" smaller than the duct to test the integrity of the duct.

22.3.6 Raceways Suspended Below Bridges: Conduits suspended below bridges shall be Rigid Galvanized Steel, or fiberglass. The color of fiberglass duct shall be black. Sizes and other requirements shall be in accordance with other sections of this Design Manual as applicable.

22.3.7 Manholes and Handholes: Manholes and handholes spacing shall be as required by code and by wire-pulling requirements, but not more than 500' apart. The minimum inside dimension of manholes that will

contain medium voltage cables shall be 12' x 9' x 6' - 6". In extenuating circumstances, manholes with inside dimensions smaller than the minimum indicated in the previous sentence will be considered subject to the written approval of the Authority. The A/E shall provide drawings or schematics to justify the use of a smaller manhole. However, in no case shall the internal height of the manhole be less than 6' – 6". Diameter of manhole openings shall be 36". Handholes shall be minimum 24" x 24" x 24". Handholes shall not be used on medium voltage power systems. Covers shall be grounded. All cables shall be racked on non-metallic cable racks designed for installation on walls of manholes. Handholes and manholes in streets shall meet Virginia Department of Transportation Standards. Handholes and manholes airside shall meet the requirements of FAA Airfield Advisory Circulars.

22.4 Boxes and Wiring Devices

22.4.1 General: Boxes for interior electrical systems shall be hot dipped galvanized steel or malleable iron. Cover plates for receptacles, switches, and boxes shall be steel.

22.4.2 Receptacles: Duplex receptacles shall be rated at 20 amperes, 125 volts (NEMA 5-20R configuration) with side wired, copper alloy screw terminals. All exterior receptacles shall be GFCI type. GFCI receptacles shall not be wired to protect downstream receptacles, except in indoor installations where the downstream receptacles are in the same room. Receptacles shall be identified according to regular power, emergency power or data with isolated ground. The color-coding shall be as follows:

Regular Power: Brown or Ivory
Emergency Circuit: Red
Isolated Ground: Orange

22.4.3 Toggle Switches: Toggle switches used to control lighting shall be rated for use on 120 and 277 volt circuits and shall be rated for a minimum of 20 amperes.

22.5 Wire and Cable

22.5.1 General: All wire and cable shall be copper. All wiring shall be run in raceways, except for communications cabling in non-Authority owned buildings as indicated in **Section III, Paragraph 25.2**. Except as expressly permitted in the above referenced section, open wiring and direct buried wiring are not permitted. Abandoned wiring and conduits shall be removed.

22.5.2 Low-Voltage Systems: Conductors to be used on circuits rated 600 volts and less shall be rated for 600 volts and shall be types THHN, XHHW, or THWN. Conductors run below grade for outdoor lighting circuits shall be type XHHW only. MC Cable shall be permitted to be used in certain occupancies, subject to Authority approval. Wire larger than number 10 AWG shall be stranded. Wire sizes number 10 AWG and smaller may be solid or stranded. Conductor size 6 and larger shall use a compression type connector. Conductor's size 8 and smaller may use “wire nuts” or crimp connectors.

22.5.2.1 Fire Resistant Low Voltage Cables: Where necessary to meet code requirements for fire resistance, cable types such as RHW and MI cable may be used, subject to Authority’s written approval.

22.5.3 Medium Voltage Cable: All medium voltage cables installed underground shall be installed in concrete encased ducts. Medium voltage cables installed in manholes and pullboxes shall be wrapped with fireproofing tape, with each conductor separately wrapped. Where separable connectors are used, fireproofing shall not prevent separation of connectors. Medium-voltage cables shall be identified in each manhole with laminated plastic tags that will indicate the voltage, phase, and feeder number. Tags shall be permanently marked and a sample shall be submitted for Authority approval prior to installation. Only single-conductor cables shall be used. Cable shall have EPR type insulation. The minimum size for 5 KV, 8 KV, and 15 KV feeder cables shall be 500 MCM, except that size 4/0 may be used as follows: on feeder taps to individual substations or multiple substations where the anticipated

and future load is within the capacity of the cable. A 4/0 ground cable shall be run with each circuit. Terminations and splices shall utilize compression-type cable lugs. Alternate circuit cables shall be racked on opposite sides of manholes. Cable insulation levels: Cables shall be rated 5 KV (133% insulation level) or 8 KV (100% insulation level) for use on 4160 volt systems. Cables shall be rated at 15 KV (133% insulation level) for use on 13.2 KV systems. Cables shall be rated 35 KV (133% insulation level) for use on 34.5 KV systems. Taps, and splices other than straight two-way splices on medium-voltage cable shall be made utilizing separable connectors conforming to IEEE 386. Terminations shall conform to IEEE 48 Class 1. Separable connectors shall consist of all-copper components. Medium-voltage cable splices and taps shall be made with a minimum of 3' of slack cable on each side of the splice or tap and shall be made by a certified cable splicer. Record of certification shall be submitted to the Authority. All medium voltage cables shall be hipotted by an independent testing agency after installation and before energizing, per NETA procedures. Records shall be submitted to the Authority. The Authority will provide the A/E with a specification for medium voltage cable. The A/E shall review the specifications and modify it to conform to the specific project requirements.

22.5.3.1 Ronald Reagan Washington National Airport Specific Requirements: Medium voltage cables at Ronald Reagan Washington National Airport shall be rated 5 KV (133% insulation level) or 8 KV (100% insulation level) for use on 4160 volt systems and 35 KV (133% insulation level) for 34. 5 KV systems. For 35 KV systems, only sizes 1/0 and 4/0 shall be used.

22.5.3.2 Washington Dulles International Airport Specific Requirements: Medium voltage cables shall be rated at 15 KV (133% insulation level) for use on 13.2 KV systems. Cables shall be rated 5 KV (133% insulation level) or 8 KV (100% insulation level) for use on 4160 volt systems. For 35 KV systems, only sizes 1/0, 4/0, 500KCMIL, and 750KCMIL shall be used. For new installations, separable connector arrangement shall consist of deadbreak junctions mounted on the manhole walls, with elbow connectors on the cable ends. Deadbreak junctions shall consist of all copper components.

22.6 Electrical Identification

22.6.1 General: The Authority will provide the A/E with a specification for electrical identification. The A/E shall review the specifications and modify it to conform to the specific project requirements.

CHAPTER 23 Lighting Systems

The A/E shall design all projects so that the work required in the Construction Documents incorporates all relevant requirements as set forth below. Lighting levels shall be designed to meet, but not exceed the levels given in the *Illuminating Engineering Society (IES) Lighting Handbook*.

23.1 Interior Lighting

23.1.1 General: Lighting in general office areas, mechanical and electrical equipment rooms, corridors, and similar applications shall be fluorescent type. Fluorescent fixtures utilizing linear lamps shall be specified with type T-8 or T-5. Ballasts shall be high-efficiency, Class P, minimum 90% power factor. Where available, electronic solid-state ballasts shall be used. Solid-state ballasts shall have a maximum total harmonic distortion of less than 20%. All fluorescent lighting shall have tube guards or lens covers; in mechanical areas, fluorescent light fixtures shall have cage guards. Storage areas and mechanical equipment areas with high ceilings shall use fluorescent or HID lamps depending on size of area and height of ceiling.

23.1.2 Use of Incandescent Lighting: Incandescent lighting shall not be used, except by special permission of the Authority.

23.1.3 Interior Lighting Control: Photoelectric control shall be provided for interior spaces where natural lighting is available. Occupancy controls shall be utilized in public areas where feasible, such as hold-rooms, bag-claim areas, and lavatories. Where automatic control of lighting is not provided, control of lighting in indoor public areas shall be from circuit breakers in panelboards. Where contactors are used, they shall be mechanically held. Lighting in service areas, including maintenance, electrical, and mechanical rooms shall be manually controlled by wall switches. Lighting controls shall comply with IECC.

23.1.4 HID Fixtures, Interior: Where HID fixtures are used for interior illumination, a portion of the fixtures shall be equipped with quartz auxiliary lamp or instant-restrike ballast.

23.2 Exterior Lighting

23.2.1 General: Voltage for exterior lighting shall be 277 volt. Lighting shall be controlled by photoelectric controls, with hand-off-auto switch. Wiring for lighting in large outdoor areas shall use multi-phase branch circuits and adjacent fixtures shall be alternately connected to different phases. The protective circuit breakers shall be single-phase to preclude a total outage of light in any one area. Pole-mounted lighting fixtures and interior pole wiring shall be protected by in-line fuseholders located within the pole base or transformer housing. In certain applications, such as roadway and large parking lot lighting where long distances make 277 VAC circuits impractical, 480 VAC single-phase or three-phase circuitry may be used. Exterior, externally illuminated signs shall be illuminated with metal-halide lamps. In special applications, LED type signs may be utilized.

23.2.2 Washington Dulles International Airport Specific Requirements

23.2.2.1 Lighting Levels, IESNA: Lighting levels for parking lots shall be designed to meet IESNA standards for “Enhanced Security: under the “Parking Lots” category, except that the “Minimum Horizontal Illuminance” value shall be one footcandle. Lighting designs shall incorporate an appropriate light loss factor (LLF). The LLF shall not be higher than 0.8.

23.2.2.2 Point-By-Point Method: The designers of the lighting system shall provide a point-by-point printout showing the illumination level at all areas of the parking lot. The designers shall require that the lighting equipment vendor submit a similar printout, based on the proposed luminaries, for approval.

23.3 Exterior Light Poles

23.3.1 General: The maximum height for parking and roadway light poles shall be 30 feet, except as noted in the **IAD Volumes**. Roadway light poles shall have break-away bases and parking lot light poles shall be protected by poured concrete bases. All light poles shall be grounded. Light poles shall have trim cover to conceal mounting bolts and adjusting nuts.

23.4 Exterior Fixtures

23.4.1 Ronald Reagan Washington National Airport: Roadway and parking lot lighting shall use Gardco style fixtures. All streetlights shall be 400 watt high-pressure sodium with forward and side throw. All parking lot fixtures shall be 250 watt HPS with the lamp base vertical for maximum throw. The ballasts shall be multi-tap, set up for use on 277V. Exception: The above restrictions shall not apply to architectural lighting such as illumination at building exits, canopies, and beneath the ramp in front of the Terminal.

23.4.2 Washington Dulles International Airport: Exterior lighting shall be high pressure sodium type, with cutoff type fixtures. Exception: This restriction shall not apply to architectural lighting such as illumination at building exits and canopies. Refer to **IAD Vol. 1** for additional information on poles, bases, fixtures, signs and signage. The existing lighting fixture used in most aircraft apron areas is Quality Lighting, Model 117-24-F-FX-HPS1000 with Model RF 2180 mounting brackets. Where new lighting fixtures are required to match existing fixtures, the above fixture shall be matched.

23.5 Emergency Lighting

23.5.1 General: Emergency lighting and exit sign fixtures shall be fed from the emergency circuits where capacity is available, or shall have battery back-up power. New technologies for egress lighting (low energy such as LED or other technologies) shall be considered for use. The A/E shall provide the Authority written recommendations during the design process.

CHAPTER 24 Airfield Lighting

The A/E shall design all projects so that the work required in the Construction Documents incorporates all relevant requirements as set forth below.

24.1 Conduit, Underground

24.1.1 General: All underground conduits shall be installed in accordance with applicable FAA advisory circulars. A magnetically detectable marking tape indicating "Electrical Cable Buried Below" shall be installed above the conduit run. Pull boxes for underground wire shall be installed flush with grade at a maximum of every 200' along a conduit run or as required by code and the wire requirements. All airfield lighting junction boxes, manhole and handhole covers shall be permanently marked with "ELEC.AL" (airfield lighting) markings (**Refer to IAD Vol. 1, Exhibit I-3-1**).

24.2 Field Lighting Circuit Color Codes

24.2.1 General: All conductors in airfield manholes, handholes, light cans, transformers, and any other location where conductors are accessible, shall be wrapped with colored tape. The colors to be used shall be as specified by the Authority.

24.2.2 Ronald Reagan Washington National Airport Specific Requirements: Conductors in airfield light circuits are color coded to indicate circuits by geographical location and use.

24.2.3 Washington Dulles International Airport Specific Requirements: Provide nylon wire tags labeled with the circuit number, in each handhole, manhole, and junction box.

24.3 Wiring Requirements

24.3.1 Ronald Reagan Washington National Airport Specific Requirements: All taxiway and runway lighting shall be wired as two-wire systems. Each cable in a manhole, handhole, or light can shall have a quick disconnect type splice, (Elastimold No. 823 or as approved in writing by the Authority). Heat-shrink tubing shall be installed over all splices.

24.3.2 Washington Dulles International Airport Specific Requirements: Each cable in a manhole or handhole shall have a quick disconnect splice (Elastimold No. 823 or as approved in writing by the Authority) installed.

24.4 Counterpoise Wire

24.4.1 General: All airfield lighting circuits that are not within full strength pavements shall include a No. 6 AWG size bare copper counterpoise wire. The wire shall be approximately 8" above the conduit and shall be securely attached to copper ground rods installed not more than 500' apart. The ground rods shall be copper clad steel, a minimum of 10' long and ¾" in diameter. All connections, shall be by exothermic weld. The Authority may provide additional counterpoise requirements based on the needs of the particular project.

24.5 Airfield Lighting Control System

24.5.1 General: For projects that add lighting circuits or significantly alter the physical arrangement of existing circuits, the project shall include the updating of the control system, including the graphic display. Software modifications shall be done by the software vendor; information may be obtained from the Authority Office of Engineering.

24.6 Isolation Transformers

24.6.1 General: On any airfield lighting project or portion thereof where new power wiring is provided to light fixtures, new isolation transformers shall also be provided. Exception: if the existing transformers are less than four years old, they may be reused.

(This Page Blank)

CHAPTER 25 Airport Communication Systems (Acs)

The A/E shall design all projects so that the work required in the Construction Documents incorporates all relevant requirements as set forth below.

The A/E shall incorporate all physical components for a complete and operational telecommunications wiring system except for facility service entrance, copper cross-connects, fiber jumpers, switch configuration, telephone instruments and cabling from wall outlets to telephone instruments. Provision and installation of exterior copper and fiber optic cabling (exterior plant), service entrance equipment and terminations, copper cross-connects, fiber jumpers, switches and fiber remotes, switch and fiber remote configuration, telephone instruments, instrument cabling and system documentation will be by the Authority's Telecommunications Systems Department.

25.1 Coordination

25.1.1 General: The A/E shall coordinate all design efforts with the Telecommunication Systems Manager. For requirements beyond the scope of this chapter refer to the Authority's 'Telecommunications *Design Manual* , authored by Telecommunications Systems, 1 Aviation Circle, Suite 256, Washington, DC 20001-6000. This document may be obtained from the Publications section of the Authority website at www.mwaa.com under "Tenant Info".

25.2 Communication Wiring and Cabling

25.2.1 General: All telecommunications wire and cable (copper and fiber) shall be installed using one of the following methods:

25.2.2 Raceways: Raceways shall meet the requirements indicated in **Chapter 22** Power Distribution, except as follows: The minimum size raceway conduit for telecommunications wiring shall be 1" except that the final vertical drop to an outlet may be ¾". The minimum size of a raceway serving more than one outlet shall be increased proportionately. Normally riser cabling between telecommunications rooms shall be installed in 4" conduits. Underground communications duct banks shall be concrete encased.

25.2.3 Cable Trays: Cable trays shall be permitted in accordance with NFPA 70 Article 800-51.

25.2.4 Open Wiring for Communication Systems and Paging Systems: In buildings that are neither owned nor maintained by the Authority, including buildings at 44965 - 45045 Aviation Drive, Dulles, Virginia, communications wiring may be run as open wiring (without conduits). In Concourse C/D on the concourse level, paging system wiring may be run as open wiring (without conduits). Open wiring shall be run in a neat and workmanlike manner, neatly bundled, and adequately supported. Support shall be by devices designed for that purpose, and shall be attached to the building structure. Wiring shall not interfere with removal of ceiling tiles, or access to other equipment. Where wiring is run within a ceiling space used for air return, cables shall be plenum-rated types.

25.3 Telecommunications Systems Grounding

25.3.1 References: Reference **Section 25.5 Telecommunications Equipment Rooms** for Telecommunications Systems grounding requirements.

25.4 Labeling Telecommunications Systems Cables, Jacks, and Terminations

25.4.1 Scope

25.4.1.1 Identification and Labeling: The procedures in this section provide for the identification and labeling of ACS cable and wiring. The term "ACS cable" encompasses all on-airport cable and wire used for video, voice, and data transmissions.

25.4.1.2 Contracts: These procedures are to be incorporated, directly or by reference, in all new Authority design and construction contracts, including contracts for

special services, such as security systems and data networks.

25.4.1.3 Legacy Cable: Legacy wiring and cabling will not be re-labeled and existing engineering drawings will not be revised for the specified procedures, except when changes are made to the physical plant, as during building renovation and the addition, re-routing, or removal of wiring and cabling.

25.4.1.4 Numbers for Labeling ACS Cable: Numbers for labeling ACS cable, wiring, stations, and terminations are issued and managed for the Authority by Telecommunication Systems.

25.4.2 Terminology

25.4.2.1 Outside Plant Cabling: Cabling includes all copper, fiber, and coaxial cable that connect two or more buildings for the purpose of transmitting voice, data, and video signals in analog or digital formats. For the purposes of this procedure, a "building" may be an occupied or an unoccupied structure having voice, data, or video connectivity to other structures.

25.4.2.2 SONET: "SONET," or Synchronous Optical Network, is an industry-standard 155 Mbps digital fiber optic network. SONET fiber cables are a form of outside plant cable and serves as the telecommunications backbone at each airport. SONET connectivity may also be available between airport facilities.

25.4.2.3 Network Fiber is also a form of outside plant cable that provides connectivity between buildings and between nodes on a network.

25.4.2.4 Building Entrance Terminal (BET): A Building Entrance Terminal (BET) is the physical point where an outside plant cable enters a building. A building may have more than one BET, and a BET may also coincide with a Main Distribution Frame (MDF) or with an Intermediate Distribution Frame (IDF).

25.4.2.5 Main Distribution Frame (MDF): Within a building, each ACS telephone switch node is considered a MDF. All other telecommunications rooms, closets, and telecommunications facilities that have cross-connect equipment installed are considered Intermediate Distribution Frame (IDF).

25.4.2.6 Horizontal and Vertical Cabling, including riser cabling, is installed within a building.

25.4.2.7 "NetPlus" is a computer program used to manage the ACS cable plant. The NetPlus terminal is operated for the Authority by Telecommunications Systems operations and maintenance contractor.

25.4.3 Procedures for Labeling Premises and Station Cable and Wiring

25.4.3.1 Premises and Station Cabling: Premises and station cabling and wiring include all copper, fiber, and coaxial cable within a building from a BET through communications rooms and closets up to a point proximate of a tenant demarcation point, if a tenant is involved, or to the operating jack if no tenant is involved.

25.4.3.2 Intermediate Distribution Frame (IDF: Horizontal and vertical fiber and copper cable and wire connecting IDFs are identified by the building number, by the originating and terminating IDF, and by the type and number of fibers or copper wires. Cables are numbered sequentially. The 12-character labeling format is:

A. aa: 2-character identifier for type of cable

"fs"	for SM fiber
"fm"	for MM fiber
"sm"	for combined SM and MM fiber
"cp"	for copper premises
"cx"	for coax

B. xx: 2-digit number of the originating IDF room or closet, normally the IDF closet to the MDF and/or BET

C. xx: 2-digit number of the terminating IDF room or closet

D. xxxx: 4-digit number indicating the number of fibers or copper wires

E. xx: 2-digit sequential cable number, such as 01, 02, etc.

25.4.3.3 The following 12 character labeling procedures apply to station cable and wiring:

A. aa: 2-character station identifier for type of cable

"cs" for copper station
"fs" for fiber station
"cf" for copper and fiber service
"xs" for coax station
"xc" for coax and copper service
"sf" for coax and fiber service

B. xxxxx: 5-digit numerical room number

C. x: 1-digit number identifying the purpose of the cable

1 for data
2 for voice (telephone)
3 for analog video
4 for digital video

D. aa: 1-character or 2-character alpha or alphanumeric identification of a wall jack, beginning with "A" or "AA" and sequentially clockwise around the room from

E. xx: 2-digit number of the station termination

25.5 Telecommunications Equipment Rooms

25.5.1 Telecommunication Spaces: Spaces that are utilized to house telecommunications, data network, fire, security, paging, etc., equipment and typically provide the connection points between field panels/backbone and the horizontal distribution pathways. These are special purpose rooms designed and dedicated to house electronic equipment and wiring.

25.5.1.1 Reference Documents: The requirements provided in this section have been derived from the sources listed below. Designers should review the reference documents in detail for additional design criteria for Telecommunications Equipment Rooms refer to the most current versions of the following:

A. Building Industry Consulting Service (BICSI), Telecommunications Distribution Method (TDM) Manual.

B. American National Standards Institute (ANSI)/Telecommunications Industry Association (TIA)/Electronics Industries Alliance, Commercial Building Standard for Telecommunications Pathways and Spaces, ANSI/TIA/EIA-569-A.

25.5.2 Physical Considerations: Telecommunications equipment rooms shall be sized according to the area served and the equipment to be provided with adequate provisions for future expansion and additional equipment requirements.

25.5.2.1 Minimum Sizes: The following minimum sizes shall be used:

A. 10' x 8' (when serving an area of 5000 sq. ft. or less)

B. 10' x 9' (when serving an area greater than 5000 sq. ft. and less than 8000 sq. ft.)

C. 10' x 11' (when serving an area greater than 8000 sq. ft.)

25.5.2.2 The term "telecommunications closet" shall be used to refer to telecommunications spaces that are smaller

than the communications equipment rooms listed above and shall not house active electronic equipment.

25.5.2.3 The minimum ceiling height shall be no less than 8' – 6" above finished floor and no suspended ceilings shall be permitted.

25.5.2.4 Walls that support wall-mounted equipment shall be lined with ¾" fire-retardant plywood or ¾" plywood painted on all sides with two coats of light colored fire-retardant paint. Portions of the walls not lined with plywood shall be painted with two coats of light colored fire-retardant paint.

25.5.2.5 Floors and ceilings shall be sealed/treated to minimize dust and static electricity.

25.5.2.6 Telecommunications equipment rooms shall be designed to have a fully opening, lockable door at least 36" wide and 80" tall. Doors shall open outward to maximize usable space. Doorsills are not permitted as they impede movement of equipment. Doors shall be installed to slide either side to side or to be removable.

25.5.2.7 Telecommunications equipment rooms shall be located above any threat of flooding. Locations that are below or adjacent to water hazards (e.g., kitchens and restrooms) should be avoided.

25.5.2.8 Equipment not related to the support of telecommunications equipment rooms, such as piping, ductwork and distribution of power shall not be located in or pass through the room.

25.5.2.9 The following clearances must be provided for equipment and cross-connect fields:

A. Allow a minimum of 3' of clear working space from equipment and cross-connect fields.

B. Allow for 6" depth off wall for wall-mounted equipment.

C. Provide space of at least 4' from center line of rack to wall in front of and in the rear of each equipment rack or cabinet. Provide aisles at least 32 inches wide.

D. In corners, a minimum side clearance of 12" shall be maintained.

25.5.3 Power and Grounding: The room A/E shall determine power and grounding requirements within telecommunications equipment rooms, to include adequate provisions for emergency power and uninterruptible power supply (UPS) units, as may be required for the systems to be supported from the room.

25.5.3.1 Power distribution shall be in accordance with the provisions of the Design Manual **Chapter 20**, Electrical General Requirements and **Chapter 22**, Power Distribution.

25.5.3.2 A minimum of two dedicated, 2 pole, 3-wire, and 120 VAC, 20 amp, non-switched, duplex electrical receptacles, equipped with surge protection, shall be provided for equipment power. All outlets must be on non-switched circuits.

25.5.3.3 Grounding within telecommunications equipment rooms shall be in accordance with the provisions of the Design Manual **Chapter 21**, Grounding and Lightning Protection where applicable.

25.5.3.4 Grounding of telecommunications systems shall comply with NFPA 70 Articles 250 and 800, NFPA 780, ANSI/TIA/EIA-607, ANSI/IEEE-1100, and BICSI Chapter 17 of the Telecommunications Distribution Method (TDM) Manual.

25.5.4 Lighting Systems: Provide a minimum of 500 lux (50 footcandles) measured 3' above finished floor. Lighting shall be closely coordinated with rack placement. Lighting fixtures shall be mounted a minimum of 8' – 6" above finished floor. Power for lighting should not come from the power panel inside the telecommunications equipment room. At least one light fixture shall be on non-switched emergency power.

25.5.5 Security: Access to telecommunications equipment room doors shall be controlled in compliance with **Section III, Paragraph 26.4.3.1**.

25.5.6 Fire Protection and Fire Suppression: Telecommunications equipment rooms shall be equipped with fire protection and suppression systems in compliance with applicable provisions of **Chapter 15** of the Design Manual.

25.5.7 Environmental Conditions: Environmental conditions within telecommunications equipment rooms shall conform to the applicable provisions of **Chapter 11** of the Design Manual, Heating, Venting and Air Conditioning.

25.5.8 Typical Equipment: The tables below provide information relative to "typical" active devices that may be required within a given telecommunications equipment room. Passive devices, e.g., racks, fiber termination units, patch panels, ladder racks, etc., are not addressed below, refer to the Authority provided specification Section 16740 Telecommunications Distribution Systems, for requirements concerning such passive devices. It shall be the responsibility of the A/E to determine the exact equipment types and quantities to be installed within the telecommunications equipment rooms and to make adequate provisions for the equipment, including future expansion capacity.

TABLE 25. 5-1: TYPICAL ACTIVE SECURITY SYSTEM COMPONENTS					
TYPE OF DEVICE	**MANUFACTURER**	**MODEL**	**DIMENSIONS**	**POWER REQ.**	**HEAT OUTPUT**
Access Control Panel	Sensormatic	Ape/8x	24.25"Hx16. 5Wx4"D (Wall-Mount)	12VDC 40W (max.)	250 BTU/hr
ApC Power Supply (12VDC)	Alarmsaf	PS5-BFS-12-UL	11" x 15" x 4" (Wall-Mount)	2.5A @ 120VAC	146 BTU/hr
Lock Power Supply (24VDC)	Alarmsaf	PS5-BFS-24-UL	11" x 15" x 4" (Wall-Mount)	2.5A @ 120VAC	200 BTU/hr
Fiber-Optic Transceiver	International Fiber Systems	D1010 or D2100	Dimension of Fiber Optic Card Cage: 7"Hx19'Wx5. 2"D (Rack-Mount-Refer to Note 1)	1A @ 120VAC (Rack fully configured)	155 BTU/hr (Rack fully configured)
DVR	Loronix	Enterprise MP	7. 0"H x 19"W x 30"D (Rack-Mount-Refer to Note 1)	2A @ 120VAC	785 BTU/hr
Camera Power Supply (24VAC)	Altronix	ALT248-300	12.25"H x 7. 25"W x 4. 5"D (Wall-Mount)	2.7A @ 120VAC	180 BTU/hr
Code Converter	Sennetech	SC-50-AD-232	4.5" x 3.5" x 1.25" (Wall-Mount)	75mA@ 120VAC	2 BTU/hr
Code Distributor	American Dynamics	AD1691	12"H x 4"W x 14"D (Wall-Mount)	5W @ 12VAC	17 BTU/hr
Security UPS	Varies	Varies	Varies	Varies	Varies

Note 1 – Racks for security equipment shall be fully enclosed, tampered, lockable cabinets. The designer shall be responsible for making adequate provisions for ventilation and airflow in order to provide a suitable environment for the equipment.

TABLE 25. 5-2: TYPICAL ACTIVE DATA NETWORK COMPONENTS					
TYPE OF DEVICE	MANUFACTURER	MODEL	DIMENSIONS	POWER REQ.	HEAT OUTPUT
Network Switch	Cisco	3500 Series	1.75"H x 11. 82"D x 17.5"W (Rack-Mount-Refer to Note 2)	120V, 65W	256 BTU/hr
Network Switch	Cisco	6500 Series	1.75"H x 11. 82"D x 17.5"W (Rack-Mount-Refer to Note 2)	120V, 1300W	4433 BTU/hr
Power Supply	Cisco	Rps-300		120V, 300W	235 BTU/hr

Note 2 – Racks for Data Network equipment shall be fully enclosed, lockable cabinets. The designer shall be responsible for making adequate provisions for ventilation and airflow in order to provide a suitable environment for the equipment.

TABLE 25. 5-3: TYPICAL ACTIVE CATV COMPONENTS					
TYPE OF DEVICE	MANUFACTURER	MODEL	DIMENSIONS	POWER REQ.	HEAT OUTPUT
Fiber Receiver & Distribution Amplifier	Blonder Tongue	FRRA-S4A-860-43	7.25"W x 3.25"H x 10.25"L (Rack-Mount)	120VAC, 28W	96 BTU/hr
Broadbank Distribution Amplifier	Blonder Tongue	ZTA-35	11.88"L x 5.22"W x 1.75"D (Wall-Mount)	120VAC, 9W	31 BTU/hr
Broadband Distribution Amplifier	Blonder Tongue	ZCM-48-550	7.5"L x 5.63"W x 2"D (Wall-Mount)	120VAC, 19W	65 BTU/hr

TABLE 25. 5-4: TYPICAL ACTIVE 800MHz SRS COMPONENTS					
TYPE OF DEVICE	MANUFACTURER	MODEL	DIMENSIONS	POWER REQ.	HEAT OUTPUT
Bi-directional Amplifier	Kaval		(Wall-Mount)	120VAC	410 BTU/hr

TABLE 25. 5-5: TYPICAL ACTIVE FIRE PROTECTION COMPONENTS					
TYPE OF DEVICE	MANUFACTURER	MODEL	DIMENSIONS	POWER REQ.	HEAT OUTPUT
Fire Alarm Panel	Siemens	MXL	(Wall Mount)	120VAC	979 BTU/hr

TABLE 25. 5-6: TYPICAL ACTIVE AUTOMATIC ELECTRONIC DEFIBRILLATOR (AED) COMPONENTS					
TYPE OF DEVICE	MANUFACTURER	MODEL	DIMENSIONS	POWER REQ.	HEAT OUTPUT
Monitoring Panel	Siemens	MXL	(Wall-Mount)	120VAC	400 BTU/hr

TABLE 25. 5-7: TYPICAL ACTIVE PUBLIC ADDRESS COMPONENTS					
TYPE OF DEVICE	MANUFACTURER	MODEL	DIMENSIONS	POWER REQ.	HEAT OUTPUT
Amplifier	IED	6272L	(Rack-Mount)	120VAC	900 BTU/hr

CHAPTER 26 Security

The A/E shall design projects so that the Construction Documents incorporate all relevant requirements as set forth below.

26.1 Additions To Scope of Work

26.1.1 General: The A/E shall incorporate all physical components, wiring and connections up to and including security field panels. The Authority's security maintenance contractor shall be tasked with the decommissioning and removal of existing security devices, connecting new security field panels to the ACAM head end, configuring the ACAM/VMS head ends in support of the various system changes/addtions, configuring the Authority's physical security information management system (AEGIS), and updating system documentation. The A/E shall coordinate with the Authority's security maintenance contractor through the Authority's program management consultant to determine a budgetary line item for the security maintenance contractor's scope. This budgetary line item shall be carried within the project budget but shall not be included within the solicitation construction budget, i.e. such work is not to be bid by the Contractor.

26.2 TSA Rules

26.2.1 General: The following Transportation Security Administration (TSA) Civil Aviation Security Rules apply to projects involving security at Washington Dulles International Airport and Ronald Reagan Washington National Airport:

49 CFR Part 1520	Protection of Security Sensitive Information
49 CFR Part 1540	Civil Aviation Security: General Rules
49 CFR Part 1542	Airport Security

26.3 Guidelines

26.3.1 General: In addition to the above requirements, there are also guidelines that may apply to the design of security systems at Washington Dulles International Airport and Ronald Reagan Washington National Airport. The A/E shall incorporate appropriate guidance from the most recent versions of the below documents:

A. RTCA/DO-230C, Integrated Security System Standard for Airport Access Control.

B. U.S. Department of Homeland Security, Transportation Security Administration's Recommended Security Guidelines for Airport Planning, Design and Construction.

C. U.S. Department of Homeland Security, Transportation Security Administration's "Planning Guidelines and Design Standards for Airport Checked Baggage Inspection Systems".

D. U.S. Department of Homeland Security, U.S. Customs and Border Protection, "Airport Technical Design Standards, Passenger Processing Facilities".

26.4 Requirements

26.4.1 General: It is the responsibility of the A/E to comply with the latest Transportation Security Administration (TSA) requirements. In addition, the Authority has identified the following requirements concerning security systems:

26.4.2 System Compatibility: All newly introduced security system devices, i.e., card readers, cameras etc., must be compatible with the existing systems. The primary systems currently in use are as follows (A/E to verify current versions with the Authority):

A. DCA ACAM System: C*Cure 800/8000, Software House

B. DCA Video Management System (VMS): NiceVision Net, NICE Systems

C. IAD ACAM System: C*Cure 800/8000, Software House

D. IAD Video Management System (VMS): Nextiva, Verint Systems Inc.

26.4.3 ACAM Systems: With regard to ACAM systems, the following requirements must be met:

26.4.3.1 Doors Required to be Secured by TSA: Coordinate with the Authority to determine the specific doors to be secured by TSA and the appropriate security treatments.

26.4.3.2 Restricted Area Doors: In addition to Airport Security Program-required security doors, the Authority has identified the following as Restricted Area doors that also require access controls:

A. Electrical Rooms

B. Mechanical Rooms

C. Telecommunications and Radio Rooms

D. Fire Control Rooms

E. Controlling access into a corridor that provides subsequent access to a group of such rooms is not an acceptable alternative to individual door control. In such cases, each room must be secured with its own card reader for the purpose of accountability.

F. The determination of access control requirements for subcategories of utility rooms (e.g., fan rooms, fire pump rooms, UPS rooms, etc.) will be determined on a project-by-project basis depending on the nature of the facility and the criticality of the assets in those rooms.

26.4.3.3 Delayed Egress Devices: Where allowed by local building codes, all emergency egress doors leading from non-secure to TSA-designated Secured/AOA areas shall be equipped with delayed egress devices adjustable from 0 to 30 seconds.

26.4.3.4 Fire Alarm Release: A/E shall coordinate with code officials to identify those doors required to release upon the fire alarm. The design shall include interfaces with the fire alarm system to ensure such doors are unlocked when the corresponding fire alarm zones are activated. The preferred approach for releasing such doors is to provide the fire alarm-ACAM interface (typically a relay(s) provided as part of the fire alarm system) installed in the same room as the security field panels.

26.4.3.5 Electric Locks: Generally, electric locks shall be powered from 24VDC power supplies located in equipment rooms. 24VDC power and signal cabling may be routed in the same appropriately sized conduits between doors and equipment rooms.

26.4.3.6 Card Readers: In order to standardize spares, all card readers shall be combined card reader/pin pad units. When installed in exterior environments, card readers are to be provided with rain shields to preclude issues associated with rain, snow, and ice.

26.4.3.7 Electronic Security Locks: Wherever possible, and to the extent allowed by code, electronic security locks shall be fail-secure.

26.4.3.8 Recessed Door Position Switches: Recessed door position switches are preferred over surface mounted door position switches. Door position switches should utilize biased magnets for higher security.

26.4.3.9 Alarm Annunciators: All doors controlled/monitored by the access control system shall be equipped with local audible/visual annunciators. A/E shall coordinate with the Authority to determine whether annunciators are provided on the interior, exterior, or both sides of the door. Interior local audible annunciators shall

be no louder than 82 decibels and exterior shall be not less than 102 decibels.

26.4.3.10 Signage: In addition to any other signage required by the Building Code, card access-controlled emergency egress doors shall be provided with signage that reads: "Opening Door Without Using Card Will Cause Alarm", or as otherwise agreed by the Authority.

26.4.3.11 Power for Access Control Equipment: All ACAM equipment, to include door devices powered remotely from equipment closets, shall be powered via uninterruptible power supply (UPS) units. UPS units shall be provided with sufficient battery back-up to support the following requirements:

A. Where primary power is connected to an emergency or legally required standby generator-backed electrical panel, batteries shall be sized to provide 1 hour at full load.

B. Where primary power is connected to standard electrical panel, batteries shall be sized to provide 4 hours at full load.

26.4.3.12 Security Field Panels: To provide consistency across various projects, the Authority has adopted a standard assembly to be used for all security field panels. This standardized panle includes Software House boards (quantities may vary per specification application). 12 VDC and 24 VDC power supplies, lock power distribution modules within individually fused outputs, terminal strips, etc. This standard panel assembly (dimensions: 30" H x 30" W x 8" D) will typically accommodate up to 16 card readers, 56 inputs, and 48 outputs (alternative configurations of input and output boards can support increased counts of inputs and/or outputs, if needed). Due to the security sensitive nature of the panel layout, drawings have not been included herein, but will be provided to the A/E on an as-needed basis.

26.4.4 CCTV Systems: With regard to CCTV systems, the following requirements must be met:

26.4.4.1 Cameras: Unless determined otherwise by the Authority Security and Operations designees, all cameras must support the following:

A. Cameras shall be fully compatible with the VMS.

B. Cameras shall receive power via Power over Ethernet (PoE).

C. Camera resolutions shall be selected based upon specific applications. Megapixel cameras (1.3 megapixels and above) are typical for most applications.

D. Cameras shall support IEEE 802.1X authentication and authorization.

E. The project shall supply VMS licenses for each added camera. Such licenses shall be transferred to the Authority.

26.4.4.2 VMS Head-End: Depending upon the number of cameras introduced under a given project, additional servers, storage, network switches, and other IT infrastructure may be required. The A/E will coordinate with the Authority to determine the impact on the VMS head-end. Should additional IT infrastructure be required, the Authority shall procure, install, and configure such through its security system maintenance contractor. The A/E will be responsible for coordinating such costs with the Authority and carrying the corresponding cost as a line item within the overall project budget. However, such costs shall not be included within the solicitation construction budget, i.e. such work is not to be bid by the Contractor.

26.4.4.3 Power Supplies: As indicated above, cameras are typically to be powered via PoE derived from SECNET switches. If, however, supplemental power is required (e.g. heaters/blowers, fiber transceivers, etc.), such devices shall be powered from 24 VAC power supplies located in equipment rooms. 24 VAC power, and data may be routed in the same appropriately sized conduits between cameras and equipment rooms.

26.4.4.4 Assessment Cameras for TSA Security Doors: Assessment cameras for TSA security doors are to be located on the secure side of the door to ensure that an intruder's face may be seen in association with a given door alarm.

26.4.4.5 Fixed Cameras: Fixed cameras are strongly preferred over pan-tilt-zoom cameras for alarm assessment applications.

26.4.4.6 Exterior Cameras: Generally, data associated with exterior cameras shall be transmitted over fiber to equipment rooms. Such cameras shall also be installed with environmentally controlled housings to maintain operational environments as specified by the camera manufacturer.

26.4.4.7 Power for CCTV Equipment: SECNET switches that provide PoE power to cameras shall be powered using the same criteria identified in paragraph 26.4.3.11 above. Supplemental 24VAC power supplies (see paragraph 26.4.4.2 above) shall be powered via uninterruptible power supply (UPS) units with sufficient battery back up to support one hour at full load.

26.4.5 Use of ACS: Where appropriate to the installation, new security systems shall make use of the Airport Communication System (ACS) for the transportation of security communications between equipment rooms.

26.4.6 Tamper Monitoring: Enclosures, cabinets, housings, and boxes, of every description having hinged/removable covers which contain security system components, security power sources, or contain security wiring terminations and/or splices shall be monitored via tamper switches connected to the ACAM system. Enclosures that contain no equipment, power sources, or terminations (e.g. junction boxes and pull boxes) are not required to be equipped with tamper switches, but must be locked or secured with tamperproof screws. Tamper switches are not required for camera housings.

26.4.7 Boarding Bridge Security: Boarding bridge stairwell doors shall be equipped with ingress and egress card readers, local audio/visual annunciators (both sides of the door), electric strike and door status switch. Low profile, impact-resistant, ceiling-mounted cameras shall be mounted at both ends of the boarding bridge to view both the stairway door and the door to the concourse. Egress doors from the boarding bridge to the concourses shall be provided panic bars equipped with request to exit switches allowing free egress and allowing the alarm to be shunted by depressing the panic bar. Activating the outside lever will not cause a "request-to-exit" to be activated. Access from the hold room to the boarding bridge will be accomplished via a card reader.

26.4.8 Tunnel Camera Placement: Where non-fixed (i.e. pan/tilt/zoom) cameras are allowed, such cameras shall be placed in a manner to achieve a vertical field of view of 10' (based on optical zoom capabilities, digital zoom shall not be considered) throughout the camera's area of coverage. As an example, with the optical zoon at full magnification, the vertical field of view will not exceed 10' at the far end of the required field of view. In order to minimize dead spots within the camera's area of coverage, cameras shall be placed at intervals to ensure that the areas for adjacent cameras overlap. Vertical rise and fall of the tunnels, horizontal bends, and other visual obstructions, shall be determining factors in placement of cameras.

26.4.9 Security Raceways: All security cabling shall be installed in fully enclosed, dedicated raceway systems and shall not be shared with any other system. Exceptions include cable routed within equipment rooms (e.g., cables run on ladder racks between wall-mounted panels and equipment racks) and the use of ACS cable plant between equipment rooms.

CHAPTER 27 Signing and Graphics

The A/E shall design all projects so that the work required in the Construction Documents incorporates all relevant requirements as set forth below. Design criteria and standards for signing and graphics are included in DCA Vol. 1, Section II, Signing Design Guidelines for Ronald Reagan Washington National Airport Standards and IAD Vol. 1, Section II, Signing Design Guidelines for Washington Dulles International Airport Standards.

(This Page Blank)

CHAPTER 28 Information (Network) Systems

The A/E shall design all projects so that the work required in the Construction Documents incorporates all relevant requirements as set forth below.

The A/E shall incorporate all physical support equipment, i.e., routers, switches, uninterruptible power supplies, racks, wire ways, patch panels, termination blocks, etc. within telecommunication rooms to support the network system. Configuration of routers and switches, patch cabling and cabling from the data outlets to desktop equipment will be provided by the Authority's Information Systems Department. Desktop equipment is not provided or procured as scope of the Project.

28.1 Coordination

28.1.1 General: The A/E shall coordinate all design efforts through the Design Department with Information Systems. For requirements beyond the scope of this chapter refer to the Authority's 'Network Design Manual' authored by Information Systems, 1 Aviation Circle, Suite 248, Washington, DC 20001-6000.

28.2 Connectivity Design

28.2.1 General: To ensure the continued operation and evolution of both packet and switched networks refer to **Chapter 25.**

28.3 Network Port Numbering Scheme

28.3.1 General: In order to identify a port location for new installation and for modifying existing infrastructure, all data ports will be numbered in a consistent manner. Numbering shall be furnished at the distribution point and at each end point. The following shall be applied to all data ports within the Authority. Additionally, building numbers will be applied to identify the exact facility location.

28.3.2 Patch Panels and Equipment Ports: Patch panels shall be located within Telecommunication Rooms. These devices shall be rack mounted and will be numbered using the patch panels location on the rack; top being A, next down being B, etc. The ports on a patch panel will be numbered from left to right and from top to bottom. Patch panels shall be sized as a minimum 24 port with 50% spare and up to 96 ports as a minimum. Equipment ports shall be numbered using row or blade number and port number. Equipment port numbers shall be represented using the following numbering scheme: 1-1, 1-2, ... 3-23, 3-24, etc.

28.3.3 Room and Jack Number: The numbering scheme will identify each jacks location along the top portion of the wall plate. The bottom of each wall plate will identify the specific jack and its telecommunications room connection point. The label will also be placed above its respective patch panel RJ45 position. Data jacks within each room will be identified in a clockwise rotation i.e., left to right, with this reference being made while looking into the room from the doorway. The jack location will be expressed using the room number. The labeling will be machine produced with font size being 8 point. Information on a data plate will appear as follows:

28.3.3.1 Top of Wall Plate (Row 1): Floor – 1 Character, Room # – 5 Characters.

28.3.3.2 Bottom of Wall Plate (Row 2): Jack # - 2 Characters, Patch Panel – 1 Alpha character, Patch Panel Port # - 2 Characters.

28.4 Systems Integration

28.4.1 General: System integration shall be identified as the process of installing, testing and putting a new system into operation where an interface to the Authority network is required. Information Systems requires a minimum 30-day notice for interconnects to ensure all Authority requirements are fulfilled.

28.5 Internet/Transmission Control Protocol (TCP/IP)

28.5.1 General: Any system that requires TCP/IP numbers must request such numbers from Information Systems. No system may be installed onto the Authority network without meeting Information Systems numbering scheme.

28.6 Domain Names and Relationships

28.6.1 General: Any Domain Name requirements or special relationships required to interface with the Authority network must be submitted to Information Systems for review and approval.

28.7 Special Requirements

28.7.1 General: In the event special considerations are required for a specific projects or demonstrations, such as bypassing "WebSence" or allowing specified traffic through the firewall, a written request must be presented to Information Systems with sufficient time for the technical staff to review, evaluate and, if approved, support the action requested.

28.8 Glossary of Terms

28.8.1 Routers: The Authority uses Cisco Routers to meet the need to transport information between divisions and/or airports. The 7500, 4500, 3600, 2500, and 1600 families of router are either in place or planned for immediate installation throughout the Authority network. When using the symbols associated with each router family include the model number, number of serial ports and the number of Ethernet ports and the speeds and connectors associated with each port type i.e., ST, SC, RJ-45 and 10 Mbps, 100 Mbps, 1Gbps, 750 Kbps, T1, etc. Where possible the drawings should indicate the IP number, Net Mask and routing protocol associated with each link.

28.8.2 Main and Workgroup Switches: The Authority has selected Cisco 6500, 5500, 5000, 4000, 3500 and 2900 Family of switches for use as main and workgroup switches. Network diagram(s) will represent these switches and notations as well as a card-by-card listing of ports, their termination points, speed and duplex, as well as the connection supported. Each card listing will also indicate any VLAN configurations within a switch and between switches. Notations of SNMP and/or RMON management and reporting will be indicated.

28.8.3 Hubs: Hubs have historically been used to provide connectivity to small groups of users throughout the Authority. This practice is no longer being supported due to the complexity and traffic requirements of new, CPU and network demanding, applications. It may be in the best interest of the Authority to use hubs when building and/or connecting special purpose servers and their associated workstations. In the event hubs are proposed it is up to the respondent to represent the hubs and to provide connectivity listings. Information on SNMP and/or RMON capability should also be listed. Use of hubs must have prior approval of the Information Systems Department.

28.8.4 Servers: The Authority has standardized on the Dell Computer family of servers to provide general application support to the user community and on Digital Equipment Corporation (DEC) equipment where special applications are required. These servers can be used in a number of areas. This class of server should identify servers as Application Servers, Database Servers, Gateways, Video Server, or any other function that is supported. When a server acts in a multiple application environment, the primary application should be identified with the server. Where the Authority uses Digital Equipment Corporation (DEC) equipment the primary machines belong to the Alpha Series of Servers, currently the Alpha 1000 and Alpha 4000. Where the Dell Servers are utilized the primary systems include the Dell 1300, 2400, 3400, 4400, 6300, 6350, and the Dell 6400 Servers.

28.8.5 Workstations: The Authority has standardized on the Dell Computer family of workstations. The primary workstation is the Dell OptiPlex. The configuration of this

workstation varies with the application that it is expected to support.

28.8.6 Terminals: The Authority has used dedicated terminals in very few instances. These cases are associated with special purpose systems that require a terminal to act as the console for the system. Use of terminals must have prior approval of the Information Systems Department.

28.8.7 Scanners and Printers: The Authority primary manufacturer of choice for scanners and printers is Hewlett-Packard.

(This Page Blank)

CHAPTER 29 *i*MUSE System

29.1 Description of *i*MUSE System

29.1.1 The Authority Has Installed an intelligent Multiple User System Equipment (***i***MUSE) system for airlines' use to print tickets, boarding passes, and baggage tags at IAD. New facilities shall be provided as directed by the Authority to expand the existing system. The existing system is manufactured by ARINC, and system maintenance is provided and contracted though an independent vendor by the Authority. The A/E shall consult with ARINC and the maintenance contractor to ensure the design for the expanded system conforms to the requirements of the existing system.

29.2 Equipment Required

29.2.1 Equipment Extent: The extent of equipment required shall be indicated by drawings, risers, schedules, and technical specifications. The system shall include, but is not limited to, data communication switches, fiber optic and Category 6 patch panels, fiber optic and Category 6 patch cables, equipment racks, and all other necessary fiber optic Local Area Network (LAN) or Wide Area Network (WAN) hardware and cabling required for intercommunication of components. The Work shall provide all necessary ***i***MUSE system hardware and software elements, including ***i***MUSE intelligent workstations, airline gateways (as necessary), ticket/boarding pass printers, bag tag printers, boarding gate readers, document printers, and uninterruptible power supplies. Additionally, the Work shall include furnishing and installing new podium millwork inserts into the counter shells furnished by Others, typically specified by the building Architect and furnished as part of the General Contractors Work.

29.3 Minimize System Data Failures

29.3.1 Failures: To minimize system data communication failures, data distribution network switches, cabling, and terminal devices are installed as an interleaved system. This requires two data switches and patch panels in each telecom room (Subnet A and Subnet B), with two sets of Category 6 cables routed to the network node terminal devices (workstations and printers), such that adjacent devices are connected to a different subnet. For example, at a two-position counter, one workstation, ticket/boarding pass printer, and one bag tag printer are connected to Subnet A; the adjacent workstation, ticket/boarding pass printer, and one bag tag printer are connected to Subnet B.

29.4 Interface Connections: All interface connections splices and/or cross connect patches between existing ACS fiber optic cables and any new fiber optic cables shall be made by the Authority's Telecommunications Systems Department contractor.

29.5 Turnkey Responsibility

29.5.1 Specification Requirements: The A/E shall specify that it is the responsibility of the Contractor to provide a turnkey ***i***MUSE system to the Authority and that the Contractor shall contract with ARINC to purchase the equipment, provide the hardware installation, provide the software configuration and commissioning of the system, and provide final testing of the equipment installed. Contractor shall also provide and install the podium millwork inserts as part of the ***i***MUSE system.

29.6 Applicable Standards/Codes Documents

29.6.1 Publications: The publications listed below, form a part of the specification to the extent referenced. The publications are referenced in the text by the basic designation only. Where standards and publications are identified, they shall be the most current version.

29.6.1.1 EIA/TIA-568-Commercial Building Telecommunications Wiring Standard;

29.6.1.2 EIA/TIA-569-Commercial Building Standard for Telecommunications Pathways and Spaces;

29.6.1.3 EIA/TIA-606-Admisistration Standard of the Telecommunications Infrastructure of the Commercial Buildings;

29.6.1.4 EIA/TIA-607-Commercial Building Grounding and Bonding Requirements for Telecommunications;

29.6.1.5 NFPA 70-National Electric Code;

29.6.1.6 Virginia Confined Space Standard For Construction.

29.6.1.7 Authority Procedures for Cable Identification and Labeling

29.7 A/E *iMUSE* Designer Alerts

29.7.1 Baggage Handling System Integration: The A/E shall determine if any new integration requirements with the Baggage Handling System are required.

29.7.2 ARINC System Environment: The A/E shall ensure that any new airline coming onto the system has been “certified-tested” by ARINC to operate in the ARINC system environment.

29.7.3 ARINC Barcode Readers: The A/E shall ensure any airline planning to utilize the bar code readers at the passenger boarding bridge podiums, are “certified-tested” by ARINC to use the bar code reader feature.

29.7.4 Scheduling the Project: Various ***i***MUSE equipment may have long lead times of approximately 12 - 16 weeks.

29.7.5 Boarding Pass Readers: Boarding pass readers shall have both magnetic and bar code reading capability.

29.7.6 *i*MUSE Workstation Monitors: The Authority has standardized on LCD flat panels (typically 15" diagonal) as the display to be utilized with ***i***MUSE workstations. Adequate space provisions must be included in the design of both inserts and casework.

BIBLIOGRAPHY

ADA Compliance Guide, Americans With Disabilities Act, contents of the Federal Register, Vol. 56, No. 14, Tuesday, January 22, 1991; 'Thompson Publishing Group.

Airport Roadway Guide Signs, Washington, DC: Institute of Transportation Engineers.

American National Standard for Buildings and Facilities -- Providing Accessibility and Usability for Disabled People, ANSI A117.1-1999; American National Standards Institute, Inc., New York City, New York.

BOCA Basic National Building Code, Country Club Hills, Ohio: Building Officials and Code Administrators International, Inc. (Note: Refer also to Virginia amendments.)

Dulles International - Airport Master Plan Report, August 15, 1964; prepared for the Federal Aviation Agency, Washington, DC; prepared by Ammann & Whitney, Eero Saarinen & Associates, Burns & McDonnell, and Ellery Husted.

Guidelines for Airport Signing and Graphics, Revised May 1985; AAAE (American Association of Airport Executives), AOCI (Airport Operator's Council International), and ATA (Air Transport Association of America).

IES Lighting Handbook, Latest Edition, "Application Volume"; Illuminating Engineering Society of North America.

IES Lighting Handbook, 1984 Edition, "Reference Volume"; Illuminating Engineering Society of North America.

Life Safety Code, NFPA 101. Quincy, Massachusetts: National Fire Protection Association.

Manual for Signing and Pavement Marking. Washington, DC: American Association of State Highway and Transportation Officials.

Manual on Uniform Traffic Control Devices for Streets and Highways, (MUTCD) 1988 Edition; U.S. Department of Transportation, Federal Highway Administration.

National Electrical Code, Quincy, Massachusetts: National Fire Protection Association.

Pantone Color Specifier, Designers Edition of the Pantone Matching System, 1973; Pantone, Inc.; (transparent ink edition).

Pantone Professional Color System Specifier, Professional Edition of the Pantone Matching System, 4th Edition, 1990; Pantone, Inc.; (opaque pigment edition).

"Plexiglas" acrylic sheet samples; Altuglas International, 800-523-7500, www.plexiglas.com/altuglas.A Policy on Geometric Design of Highways and Streets, 1984 Edition; American Association of State Highway and Transportation Officials.

Providing Accessibility and Usability for Disabled People, ANSI A117.1. New York: American National Standards Institute, Inc.

Road and Bridge Specifications, January 1987; Virginia Department of Transportation Officials.

Signing and Graphics for Parking, Washington, DC: National Parking Association.

Special Provisions & Specifications for Terminal Building Signs, 1962; for the Federal Aviation Agency, Bureau of National Capitol Airport; prepared by Amann & Whitney, Eero Saarinen & Associates, Burns & McDonnell, Ellery Husted.

Standard Highway Signs, 1979 Edition; U.S. Department of Transportation, Federal Highway Administration.

Standard Specifications for Highway Signs, Luminares, and Traffic Signals, (current edition); American Association of State Highway and Transportation Officials.

Symbol Signs, November 1974; prepared for the office of Facilitation, Assistant Secretary for Environment, Safety, and Consumer Affairs, U.S. Department of Transportation; prepared by The American Institute of Graphic Arts, 1059 Third Avenue, New York, NY 10021; DOT-OS-40192. Also available in digital format at www.aiga.org/content.cfm?ContentAlias=symbolsigns.

Uniform Federal Accessibility Standards, Washington, DC: U.S. Government Printing Office.

Virginia Uniform Statewide Building Code (USBC). Richmond, Virginia: State of Virginia Board of Housing and Community Development.

LIST OF EXHIBITS

INDEX

Note: Page numbers followed by e or t indicate Exhibits and Tables, respectively.

Q

R

S

CONSOLIDATED LIST OF EXHIBITS FOR DESIGN MANUAL *2014 SERIES*

DESIGN MANUAL

DCA VOL. 1

DCA VOL. 2

IAD VOL. 1

IAD VOL. 2

IAD VOL. 3

CADD

(This Page Blank)

CONSOLIDATED INDEX

Note: Page numbers followed by e or t indicate Exhibits and Tables, respectively.

A

B

C

D

E

F

G

H

I

J

K

L

M

N

O

P

Q

R

S

T

U

V

W

X

Z

END OF DOCUMENT

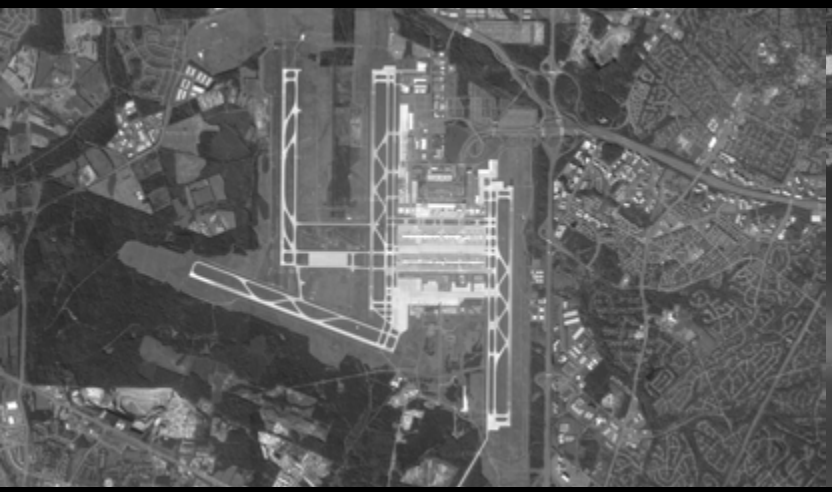

METROPOLITAN WASHINGTON AIRPORTS AUTHORITY